INSTALLATION INSTRUCTIONS

Ascent Front Bumper

Part Number: 97935

Application: 2017 Ford Super Duty

GENERAL SAFETY PRECAUTIONS

Your safety, and the safety of others, is very important. To help you make informed decisions about safety, we have provided installation and operating instructions and other information on labels and in this guide. This information alerts you to potential hazards that could hurt you or others. It is not possible to warn you about all potential hazards associated with this product, you must use your own good judgment.

CARELESS INSTALLATION AND OPERATION CAN RESULT IN SERIOUS INJURY OR EQUIPMENT DAMAGE. READ AND UNDERSTAND ALL SAFETY PRECAUTIONS AND OPERATING INSTRUCTIONS BEFORE INSTALLING AND OPERATING THIS PRODUCT.

This guide identifies potential hazards and has important safety messages that help you and others avoid personal injury or death. WARNING and CAUTION are signal words that identify the level of hazard. These signal words mean:

⚠WARNING signals a hazard that could cause serious injury or death, if you do not follow recommendations. ⚠CAUTION signals a hazard that may cause minor to moderate injury, if you do not follow recommendations.

This guide uses NOTICE to call attention to important mechanical information, and Note: to emphasize general information worthy of special attention.

⚠ WARNING

IMPACT AND MOVING PARTS ENTANGLEMENT HAZARD

Failure to observe these instructions could lead to severe injury or death

- **Always** take time to fully read the Instructions and/or Operations Guide, and/or Basic Guide to Winching Techniques, in order to understand your winch and its operations.
- **Always** use extreme caution when drilling on any vehicle. Make sure that all fuel lines, brake lines, electrical wires, and other objects are not punctured or damaged when/if drilling on the vehicle. Thoroughly inspect the area to be drilled (on both sides of material) prior to drilling, and relocate any objects that may be damaged. Failure to inspect the area to be drilled may result in vehicle damage, electrical shock, fire or personal injury.
- **Always** wear safety glasses when installing this kit. A drilling operation will cause flying metal chips. Flying chips can cause eye injury.
- **Always** use extreme caution when cutting and trimming during fitting.
- **Always** remove jewelry and wear eye protection.
- **Never** lean over battery while making connections.
- **Never** route electrical cables:
  - Across any sharp edges.
  - Through or near moving parts.
  - Near parts that become hot.
- **Always** insulate and protect all exposed wiring and electrical terminals.
- **Always** install terminal boots as directed in installation instructions.
- **Always** use appropriate and adequate care in lifting components into place.
- **Always** insure components will remain secure during installation and operation.
- **Always** tighten all nuts and bolts securely, per the installation instructions.
- **Always** perform regular inspections and maintenance on the plow mechanism, fasteners, cable and related hardware.
- **Always** replace all worn or damaged parts before operating.
- **Never** operate this WARN product with damaged or missing parts.

Read installation and operating instructions thoroughly.

WARN INDUSTRIES, INC. 12900 S.E. Capps Road,
Clackamas, OR USA 97015-8903, 1-503-722-1200, FAX: 1-503-722-3000
Customer Service: 1-800-543-9276
Dealer Locator Service: 1-800-910-1122
International Fax: 1-503-722-3005

©2016 Warn Industries, Inc. WARN® and the WARN logo are trademarks of Warn Industries Inc.

⚠ CAUTION

MOVING PARTS ENTANGLEMENT HAZARD

Failure to observe these instructions could lead to minor or moderate injury

- **Always** take time to fully read and understand the installation and Operations Guide included with this product.
- **Never** operate this product if you are under 16 years of age.
- **Never** operate this product when under the influence of drugs, alcohol or medications.

Read installation and operating instructions thoroughly.

NOTICE

EQUIPMENT DAMAGE

- **Never** tow vehicle by attaching a tow bar to the eyelets on the bumper.
- **Never** attach tow bars directly to the bumper. Damage to bumper may occur. WARN bumpers are not designed to be used for flat towing. Consult with the manufacturer of your tow bar system for the proper vehicle tow bar brackets..

Read installation and operating instructions thoroughly.

BEFORE YOU BEGIN

NOTICE

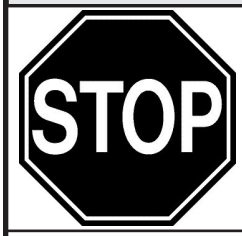

This product may interfere with driver assist systems such as adaptive cruise control and parking assist systems that have sensors or cameras installed in the bumpers or front grill area. If your vehicle is equipped with any of these systems or features, consult your vehicle owner's manual before installing this product. These systems may need to be disabled as a result of installing this product.

TABLE OF CONTENTS

Tools Required.....page 2
Torque Specifications.....page 2
Parts List.....page 3
Installation .....page 4-7
Maintenance/Care.....page 7

TOOLS REQUIRED

- Standard wrenches
- Standard sockets

TORQUE SPECIFICATIONS

Please use the recommended torque specifications when assembling this product unless otherwise specified in the instructions.

FASTENER SIZE	*FASTENER TORQUE*		*FASTENER SIZE*	*FASTENER TORQUE*	
	lb-ft	*(N.m)*		*lb-ft*	*(N.m)*
1/4"	*8*	*(11)*	*M4*	*(2)*	*3*
5/16"	*17*	*(23)*	*M5*	*(4.5)*	*6*
3/8"	*30*	*(40)*	*M6*	*(7.5)*	*10*
7/16"	*48*	*(66)*	*M8*	*(18)*	*25*
1/2"	*74*	*(100)*	*M10*	*(37)*	*50*
9/16"	*106*	*(144)*			
5/8"	*148*	*(200)*			
3/4"	*269*	*(364)*			

©2016 Warn Industries, Inc. WARN® and the WARN logo are trademarks of Warn Industries Inc.

PARTS LIST

Item	Part No.	Description	Qty.
A1	97936	Bumper	1
A2	97925	RH Bumper Bracket	1
A3	97929	LH Bumper Bracket	1
A4	98139	Spacer	3
A5	98141	.25 Spacer	2
A6	95458	RH Light Bracket	1
A7	95438	LH Light Bracket	1
A8	94889	LH Light Port	1
A9	94888	RH Light Port	1

Item	Part No.	Description	Qty.
B1	7163	CPSCR-5/8-11 x 2-Hex	8
B2	68959	WSHR-5/8-Type A Plain Narrow	16
B3	6820	WSHR-5/8-Helical Reg Spring Lock-Zn	8
B4	6821	Nut-5/8-11-Hex	8
B5	11294	CPSCR-1/2-13 x 2-Hex	8
B6	22535	CPSCR-1/2-13 x 1-3/4-Hex	8
B7	1145	WSHR-1/2-Type A Plain Wide	32
B8	2596	WSHR-1/2-Helical Reg Spring Lock-Zn	16
B9	1323	Nut-1/2-13-Hex-Gr 2-Zn	16
B10	1390	CPSCR-7/16-14 x 2-Hex Head-Gr 5-Pl	4
B11	1824	CPSCR-7/16-14 x 1-1/4-Hex Head-Gr 5-Pl	4
B12	7676	WSHR-7/16-Type A Plain Wide	8
B13	2146	WSHR-7/16-Helical Reg Spring Lock-Zn	4
B14	2583	Nut-7/16-14-Hex-Gr 2-Zn	4
B15	91541	CPSCR-SHCS-10-24X1-STNLS	20
B16	100661	9/16 LOCKING PLUG	6

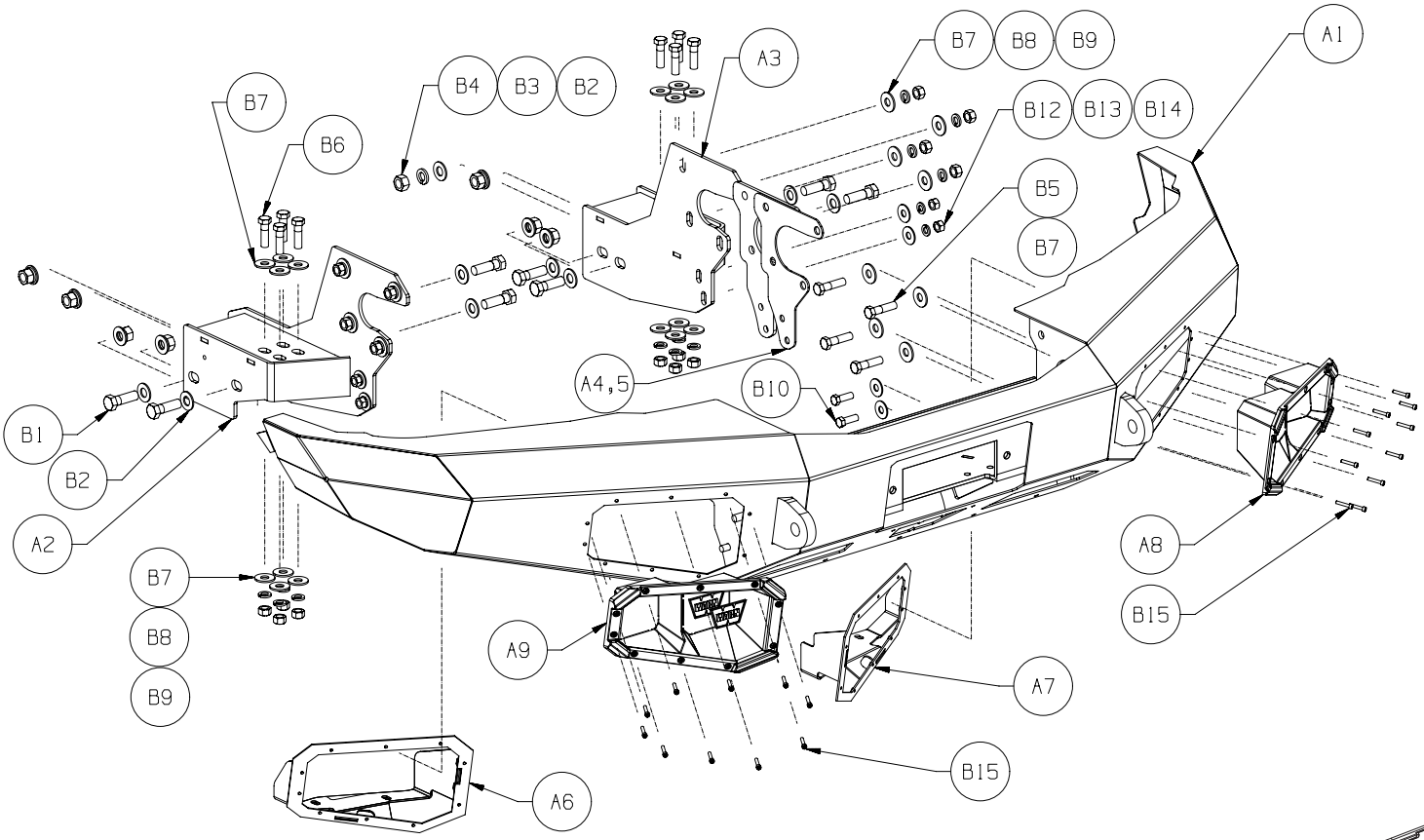

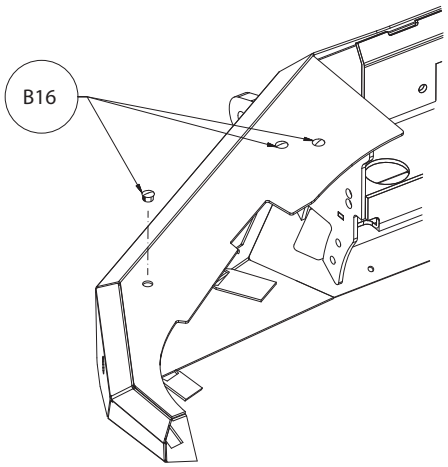

©2016 Warn Industries, Inc. WARN® and the WARN logo are trademarks of Warn Industries Inc.

1. Remove license plate.

2. Remove the eight plastic shrouds covering the bumper bolts.

3. Remove the eight bolts.

Figure 1

4. If equipped, unplug block heater harness, located behind the passenger fender well splash shield.

5. Unclip the connector from the frame rail and move aside.

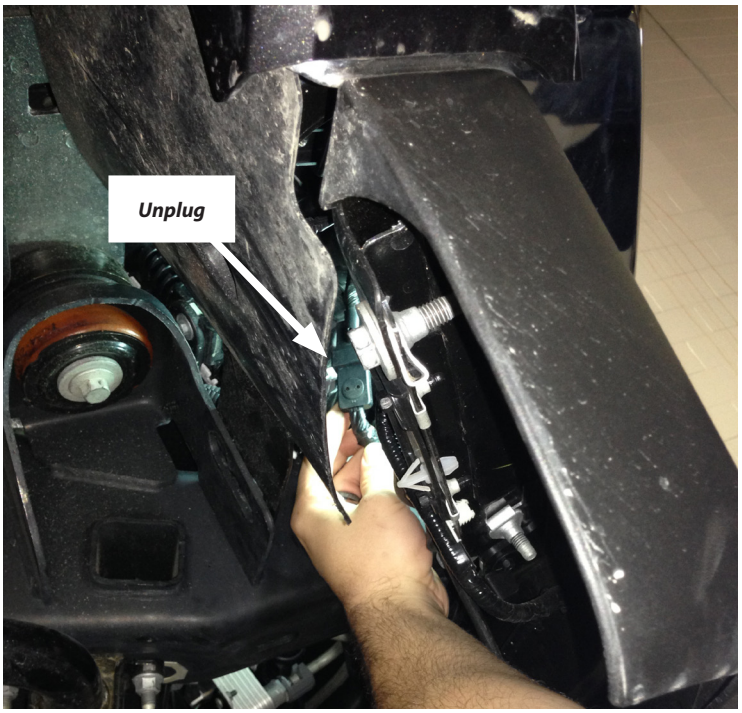

Figure 2

6. Unplug fog lamp harness connector located on the driver's side frame rail.

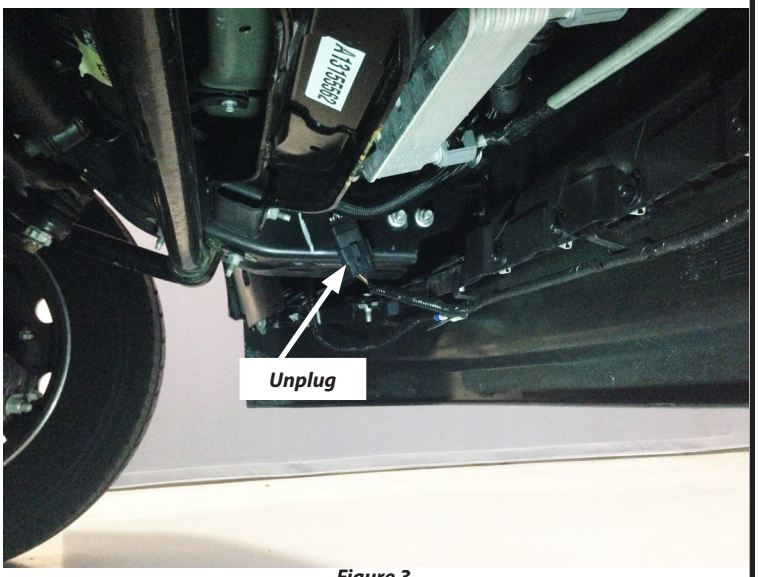

Figure 3

©2016 Warn Industries, Inc. WARN® and the WARN logo are trademarks of Warn Industries Inc.

7. Remove the two bumper brace bolts from frame.

   Repeat for other side.

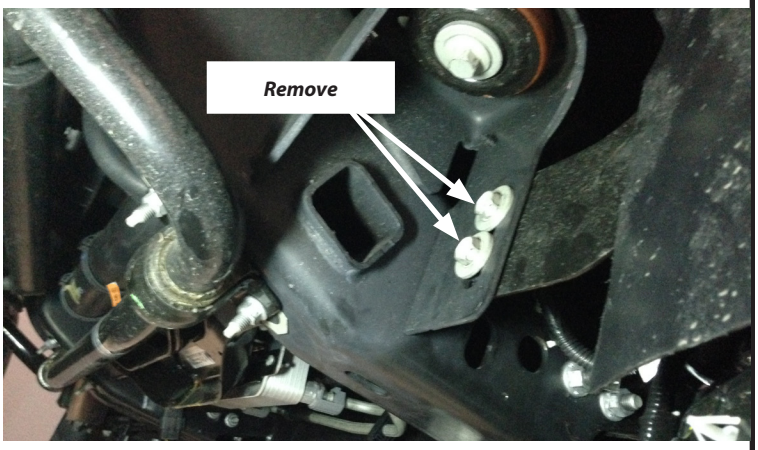

Figure 4

⚠ CAUTION

- **Always** use assistance when moving or lifting heavy parts.

9. With assistance, remove stock bumper.

Figure 5

10. Remove the eight tow hook bolts.
11. Remove tow hooks.

Figure 6

©2016 Warn Industries, Inc. WARN® and the WARN logo are trademarks of Warn Industries Inc.

12. If equipped, remove the four under-ride bar nut-plates (two each side).

13. Unclip and move aside fog light connector.

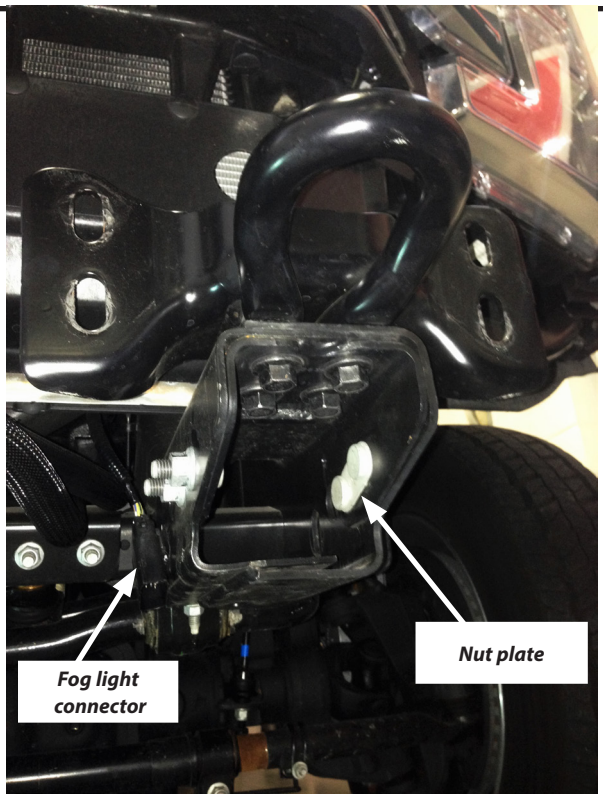

Figure 7

14. Install Frame Brackets left (A3) and right (A2). ***NOTE: Brackets are not symmetrical, check exploded view for proper orientation.***

    Use four 5/8-11 bolts, washers, lock washers and nuts on the outside of each bracket. Repeat for other side.

    Use two 1/2-13 X 1-3/4" bolts, washers, lock washers, and nuts on the top of each bracket. Repeat for other side.

    See page 2 to torque fasteners to specified torques.

    NOTE: It may be necessary to lightly tap the frame bracket into place. Be very careful not to damage any vehicle parts while installing the brackets.

    Intercoolers and hoses are close to the brackets so take care as to not damage, kink, or cut the hoses during installation.

    NOTE: Protect any tubes and wires near brackets from rubbing on brackets or fasteners.

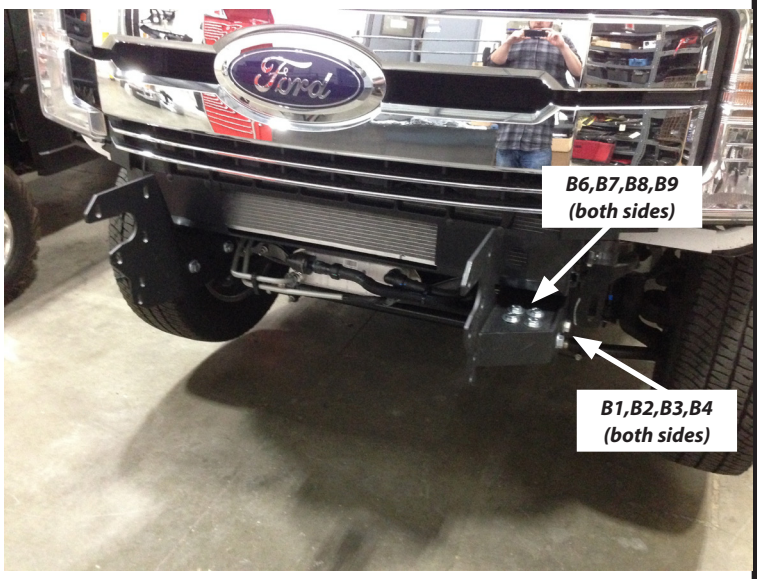

Figure 11

15. With assistance, place bumper (A1) in position and secure to frame bracket with four 1/2-13 X 2" bolts, washers, lock washers and nuts. It may be necessary to use a combination of spacers (A4) and (A5) to center bumper or fill space between frame brackets and bumper.

    For the two lower holes, use 7/16-14 X 2" bolts, washers, lock washers and nuts to fasten bumper to frame brackets.

    Refer to exploded view on page 3.

    Repeat for other side.

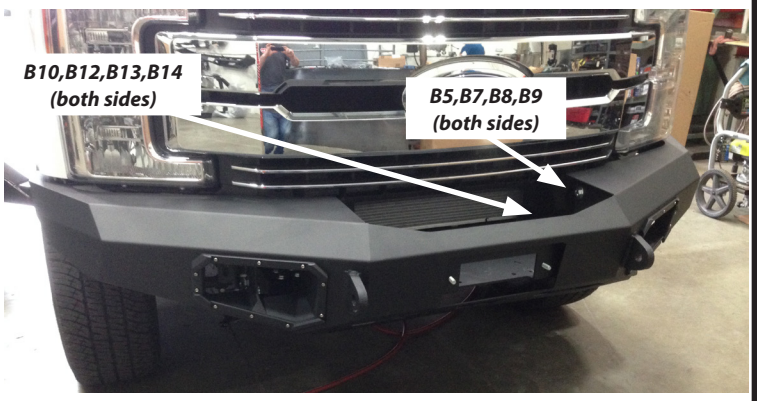

Figure 12

©2016 Warn Industries, Inc. WARN® and the WARN logo are trademarks of Warn Industries Inc.

16. Reconnect any disconnected wiring.

17. Double check that all mounting hardware for the frame brackets and bumper are at their proper torque or the factory torque.

18. If square light pods are being installed, cut out molded panel from light bezels. Openings are compatible with many commonly available LED light pods

19. While holding light bracket (A6) in place (from under and behind bumper), line up light bezel (A9) through front bumper light port to bracket. Secure pieces together with ten stainless steel socket head screws (B15). Review exploded view.

    Repeat for other side.

NOTE: ***Light bezels are equipped with removable panels for lights. Lights shown installed are sold separately.***

20. Reinstall license plate.

21. If not installing optional Ascent bar accessories, plug unused holes with provided hole plugs (B16). Refer to exploded view on page 3.

22. Installation is now complete.

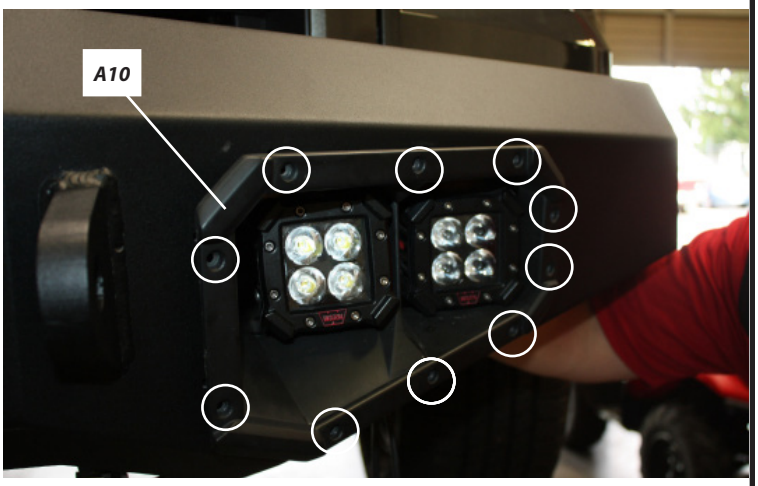

Figure 23

MAINTENANCE / CARE

1. Inspect all parts on the winch, winch mount, and related hardware prior to each use. Replace all hardware that appears rusted or deformed.

2. Inspect all nuts and bolts on the winch, winch mount and related hardware prior to each use. Tighten all nuts that appear to be loose. Stripped, fractured, or bent bolts or nuts need to be replaced.

3. Check all cables prior to use. Replace cables that look worn or frayed.

4. Check all moving or rotating parts. Remove debris that may inhibit the part from moving freely.

©2016 Warn Industries, Inc. WARN® and the WARN logo are trademarks of Warn Industries Inc.