INSTALLATION INSTRUCTIONS

PLOW MOUNTING KIT

Part Number: 87355

Application: 2011 + Polaris Sportsman 400, 500, 800

GENERAL SAFETY PRECAUTIONS

Your safety, and the safety of others, is very important. To help you make informed decisions about safety, we have provided installation and operating instructions and other information on labels and in this guide. This information alerts you to potential hazards that could hurt you or others. It is not possible to warn you about all potential hazards associated with this product, you must use your own good judgment.

CARELESS INSTALLATION AND OPERATION CAN RESULT IN SERIOUS INJURY OR EQUIPMENT DAMAGE. READ AND UNDERSTAND ALL SAFETY PRECAUTIONS AND OPERATING INSTRUCTIONS BEFORE INSTALLING AND OPERATING THIS PRODUCT.

This guide identifies potential hazards and has important safety messages that help you and others avoid personal injury or death. WARNING and CAUTION are signal words that identify the level of hazard. These signal words mean: WARNING signals a hazard that could cause serious injury or death, if you do not follow recommendations. CAUTION signals a hazard that may cause minor to moderate injury, if you do not follow recommendations.

This guide uses NOTICE to call attention to important mechanical information, and Note: to emphasize general information worthy of special attention.

⚠ WARNING

IMPACT AND MOVING PARTS ENTANGLEMENT HAZARD

Failure to observe these instructions could lead to severe injury or death

- Always Read the Plow Operator's Manual, the Winch Operator's Manual and all warning labels before operating.
- Always use extreme caution when drilling on any vehicle. Make sure that all fuel lines, brake lines, electrical wires, and other objects are not punctured or damaged when/if drilling on the vehicle. Thoroughly inspect the area to be drilled (on both sides of material) prior to drilling, and relocate any objects that may be damaged. Failure to inspect the area to be drilled may result in vehicle damage, electrical shock, fire or personal injury.
- Always wear safety glasses when installing this kit. A drilling operation will cause flying metal chips. Flying chips can cause eye injury.
- Always use extreme caution when cutting and trimming during fitting.
- Always remove jewelry and wear eye protection.
- Never lean over battery while making connections.
- Never route electrical cables:
  - Across any sharp edges.
  - Through or near moving parts.
  - Near parts that become hot.
- Always insulate and protect all exposed wiring and electrical terminals.
- Always install terminal boots as directed in installation instructions.
- Always use appropriate and adequate care in lifting components into place.
- Always insure components will remain secure during installation and operation.
- Always tighten all nuts and bolts securely, per the installation instructions.
- Always operate the vehicle at a walking speed with the blade installed. Never exceed 5 mph (8 km/h), even with blade up.
- Always plow cautiously, impact with hidden or stationary object may cause the vehicle to stop suddenly or go out of control.
- Never operate the vehicle on slopes greater than 10 degrees with the plow installed.
- Never stand or ride on the plow.
- Always stay clear of moving parts and joints. Always keep others away when operating or adjusting plow.
- Always perform regular inspections and maintenance on the plow mechanism, fasteners, cable and related hardware.
- Always replace all worn or damaged parts before operating.
- Never operate this WARN product with damaged or missing parts.
- Always drive slowly over bumpy and rough terrain. Driving at speeds that cause the plow to bounce while in the up position can cause the winch to back-drive, causing the plow to work its way down. This may result in the plow impacting a stationary object and cause damage to the vehicle and operator injury or death.
- Always drive at speeds such that the plow does not bounce and be aware of the plow position while driving at all times.
- Always be aware that the purpose of the j-bolt is to break the connection between the plow and the winch, to prevent serious damage to the ATV if the plow is raised too high. The plow blade will drop suddenly if the j-bolt breaks, so always be sure there are no bystanders when you raise and lower the plow.
- Never raise the top of the plow above the headlights of the ATV, as it may damage the vehicle and plow.
- Always replace a deformed or broken j-bolt with the spare j-bolt included in the kit.

Read installation and operating instructions thoroughly.

WARN INDUSTRIES, INC. 12900 S.E. Capps Road,
Clackamas, OR USA 97015-8903, 1-503-722-1200, FAX: 1-503-722-3000
Customer Service: 1-800-543-9276
Dealer Locator Service: 1-800-910-1122
International Sales/Customer Service: 1-503-722-3008
International Fax: 1-503-722-3005

©2011 Warn Industries, Inc.WARN® and the WARN logo are trademarks of Warn Industries Inc.

⚠ CAUTION

MOVING PARTS ENTANGLEMENT HAZARD

Failure to observe these instructions could lead to minor or moderate injury

- **Always take time to fully read and understand the installation and Operations Guide included with this product.**
- **Never operate this product if you are under 16 years of age.**
- **Never operate this product when under the influence of drugs, alcohol or medications.**

Read installation and operating instructions thoroughly.

NOTICE

EQUIPMENT DAMAGE

- **Always refer to the Installation and Specification Guide, supplied in the winch kit, for all wiring schematics and specific details on how to wire this WARN product to your vehicle.**
- **Never overtighten the j-bolt to the bracket. Doing so will pinch the winch cable against the bracket, damaging the cable.**
- **Always put the end of the actuator cable through the slot in the Termination Bracket. Terminating the cable through any other hole in the bracket will cause the bracket to not function properly and will drastically reduce the life of the actuator cable.**

Read installation and operating instructions thoroughly.

TABLE OF CONTENTS

Tools Required....page 2
Torque Specifications....page 2
Parts List....page 3
Installation.... page 4-5
Maintenance/Care....page 5

TOOLS REQUIRED

- 13mm Wrench
- 13mm Socket
- Socket Wrench

TORQUE SPECIFICATIONS

1/4 (6mm)	8 lb. ft. (10.8 N-m)
5/16 (8mm)	17 lb. ft. (12.5 N-m)
3/8 (10mm)	30 lb. ft. (40.7 N-m)
7/16 (11mm)	50 lb. ft. (67.8 N-m)
1/2 (13mm)	75 lb. ft. (101.7 N-m)

©2011 Warn Industries, Inc.WARN® and the WARN logo are trademarks of Warn Industries Inc.

PARTS LIST

Description	Qty	Ref.
Plow Mount	1	A1
Bracket RH	1	A2
Bracket LH	1	A3
Large Washers	1	A4
J Bolt Bracket	1	A5
M8 Hex Head Bolts	6	B1
Flat Washers	10	B2
Lock Nuts	4	B3
1/4-20 J-Bolt	2	C1
3/8-16 x 1 Hex Bolt	2	C2
3/8” Flat Washer	2	C3
3/8-16 Lock Nut	2	C4
1/4” Flat Washer	2	C5
1/4-20 Lock Nut	2	C6

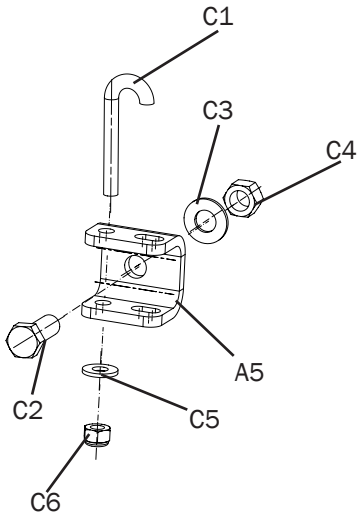

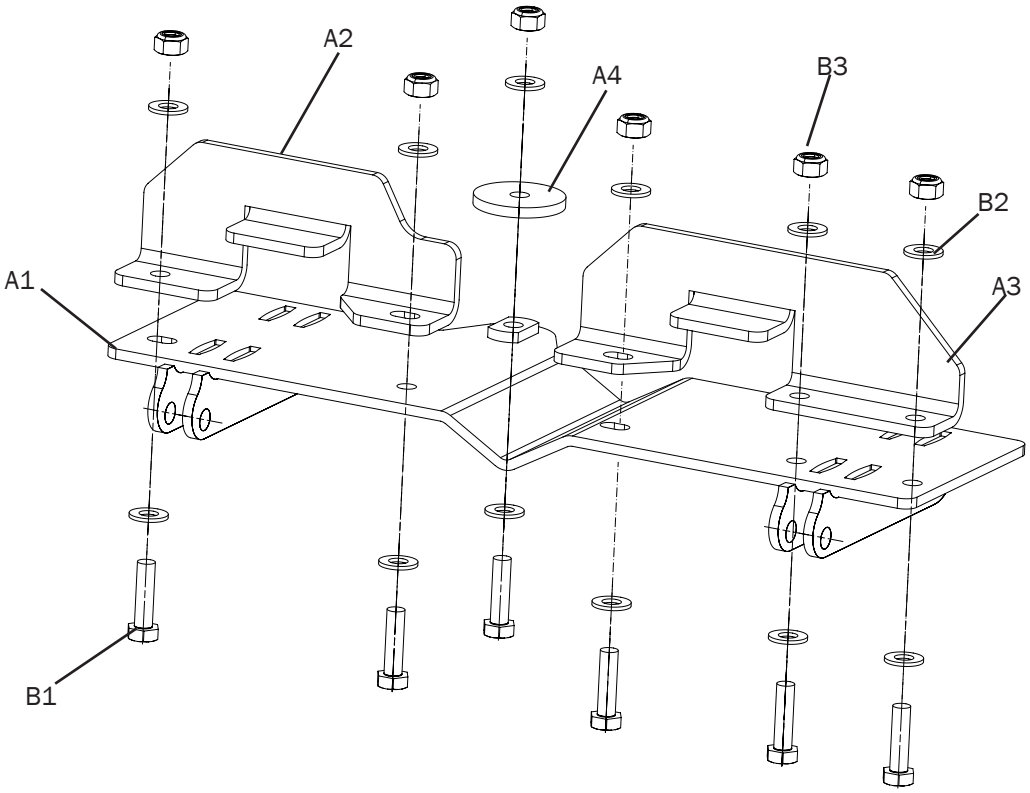

©2011 Warn Industries, Inc.WARN® and the WARN logo are trademarks of Warn Industries Inc.

1. In step one locate the welded puck on your plow mount. Insert the puck into the hole as shown in figure 1. Take one of the hex head bolts and a flat washer and insert it through the the hole with the puck you inserted through the frame.

⚠ WARNING

IMPACT AND MOVING PARTS ENTANGLEMENT HAZARD

Failure to observe these instructions could lead to severe injury or death

- **Always remove jewelry and wear eye protection.**

Read installation and operating instructions thoroughly.

Figure 1

2. On the top side of the skid plate place the large black washer over the bolt along with a flat washer and lock nut. Do not tighten yet but you can take some of the slack out of the threads. See figure 2.

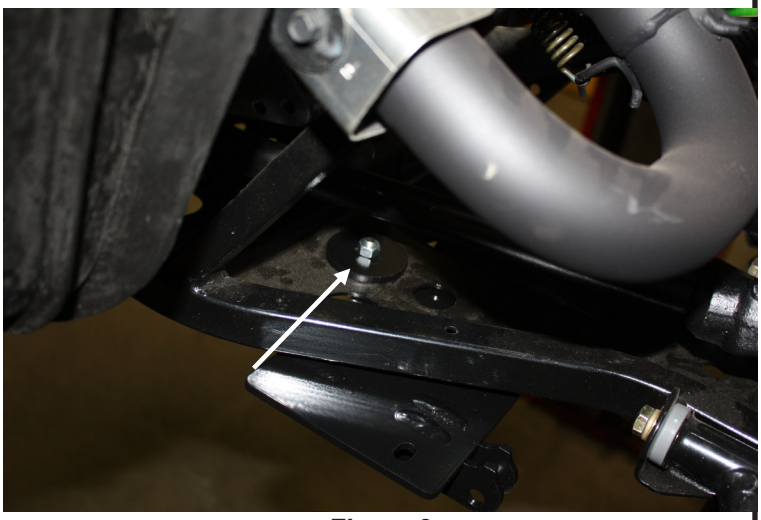

Figure 2

3. Locate and position the RH bracket a shown in figure three over the top of the frame. Attach to the plow mount using two hex head bolts four flat washers and two lock nuts. Do not tighten at this time. See figure 3.

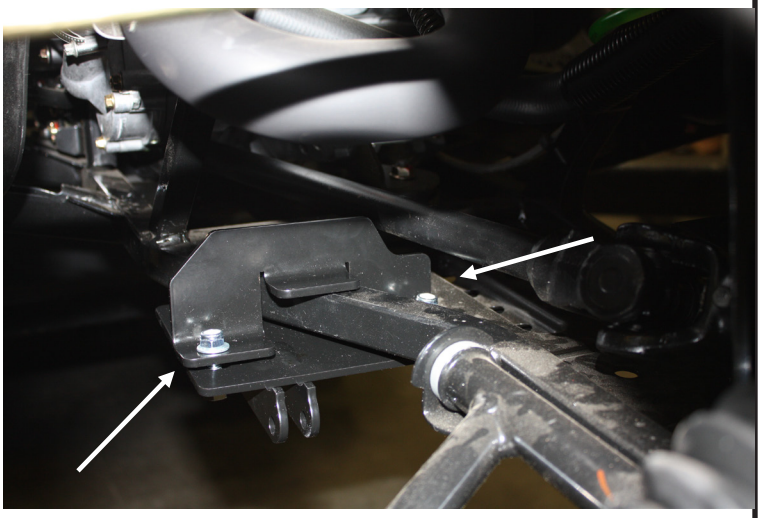

Figure 3

©2011 Warn Industries, Inc.WARN® and the WARN logo are trademarks of Warn Industries Inc.

4. Place the left hand bracket over the frame and line the holes up with the plow mount. Place the three remaining hex head bolts along with three flat washers up through the three holes. Then put three flat washers along with the lock nuts on the bolts. See figure 4

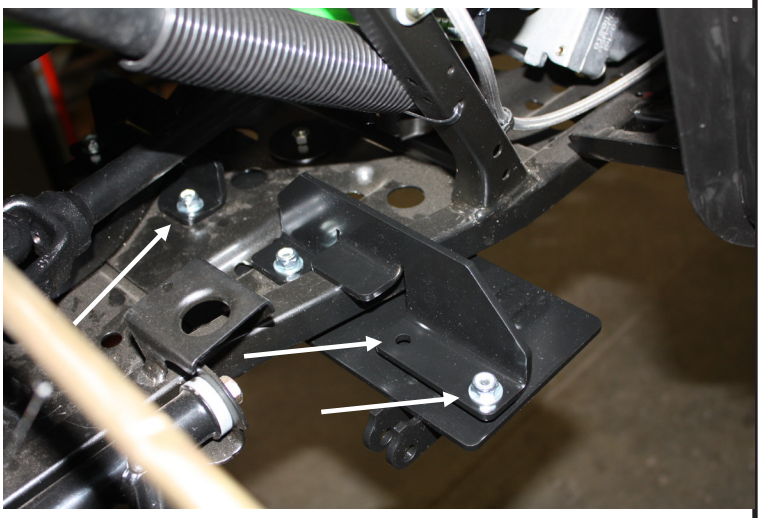

Figure 4 - *Mark Plow Mount Slots*

5. Tighten the bolt with the large black washer first. Then you can tighten the rest of the fasteners at this time. Try to tighten the rest of the fasteners evenly, and not so much that you distort the mount to much. See figure 5.

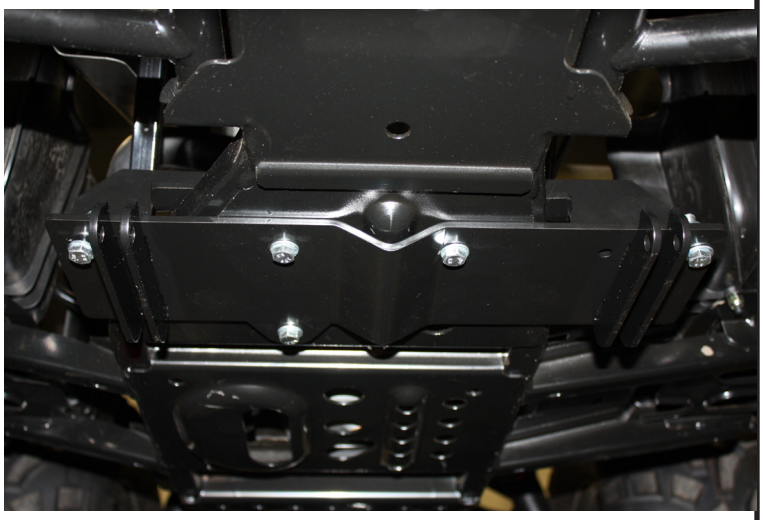

Figure 5 - *Remove Plastic Skid Plate*

MAINTENANCE / CARE

- Inspect all metal parts on the plow, plow mount, and related hardware. Replace all parts that appear rusted or deformed prior to use.
- Inspect all nuts and bolts on the plow, plow mount, and related hardware prior to each use. Tighten all nuts and bolts that appear to be loose. Stripped, fractured, or bent bolts or nuts need to be replaced immediately.
- Check all cables prior to use. Replace cables that are worn or frayed.
- Check all moving and rotating parts. Remove debris that may inhibit the part from moving freely.

CARELESS INSTALLATION AND OPERATION CAN RESULT IN SERIOUS INJURY OR EQUIPMENT DAMAGE. READ AND UNDERSTAND ALL SAFETY PRECAUTIONS AND OPERATING INSTRUCTIONS BEFORE INSTALLING AND OPERATING THIS PRODUCT.

©2011 Warn Industries, Inc.WARN® and the WARN logo are trademarks of Warn Industries Inc.