INSTALLATION INSTRUCTIONS
Front Plow Mounting Kit
Front Plow Mount Kit: 80566
Application: 2008-2009 Suzuki King Quad 400

Your safety, and the safety of others, is very important. To help you make informed decisions about safety, we have provided installation and operating instructions and other information on labels and in this guide. This information alerts you to potential hazards that could hurt you or others. It is not possible to warn you about all potential hazards associated with this product, you must use your own good judgment.

CARELESS INSTALLATION AND OPERATION CAN RESULT IN SERIOUS INJURY OR EQUIPMENT DAMAGE. READ AND UNDERSTAND ALL SAFETY PRECAUTIONS AND OPERATING INSTRUCTIONS BEFORE INSTALLING AND OPERATING THIS PRODUCT.

This guide identifies potential hazards and has important safety messages that help you and others avoid personal injury or death. **WARNING** and **CAUTION** are signal words that identify the level of hazard. These signal words mean:

WARNING signals a hazard that *could* cause serious injury or death, if you do not follow recommendations. CAUTION signals a hazard that *may* cause minor to moderate injury, if you do not follow recommendations.

This guide uses ***NOTICE*** to call attention to important mechanical information, and **Note**: to emphasize general information worthy of special attention.

WARNING

INJURY HAZARD

Failure to observe these instructions could lead to severe injury or death.

- **Always** use extreme caution when drilling on any vehicle. Make sure that all fuel lines, brake lines, electrical wires, and other objects are not punctured or damaged when / if drilling on the vehicle. Thoroughly inspect the area to be drilled (on both sides of material) prior to drilling, and relocate any objects that may be damaged. Failure to inspect the area to be drilled may result in vehicle damage, electrical shock, fire or personal injury.
- **Always** wear safety glasses when installing this kit. A drilling operation will cause flying metal chips. Flying chips can cause eye injury.
- **Always** use extreme caution when cutting and trimming during fitting.
- **Always** remove jewelry and wear eye protection.
- **Never** lean over battery while making connections.
- **Never route electrical cables:**
  - Across any sharp edges.
  - Through or near moving parts.
  - Near parts that become hot.
- **Always** insulate and protect all exposed wiring and electrical terminals.
- **Always** install terminal boots as directed in installation instructions.
- **Always** use appropriate and adequate care in lifting components into place.
- **Always** insure components will remain secure during installation and operation.
- **Always** tighten all nuts and bolts securely, per the installation and operation.
- **Always** perform regular inspections and maintenance on the winch, winch mount and related hardware.
- **Never** operate this **WARN** product with damaged or missing parts.

©2009 Warn Industries, Inc.
WARN® and the WARN logo are trademarks of Warn Industries Inc.

⚠ Caution

Moving Parts Entanglement Hazard

Failure to observe these instructions could lead to minor or moderate injury.

- ❑ **Always** take time to fully read and understand the installation and Operations Guide included with this product.
- ❑ **Never** operate this product if you are under 16 years of age.
- ❑ **Never** operate this product when under the influence of drugs, alcohol or medications.

Read installation and operating instructions thoroughly.

Notice

Equipment Damage

- **Always** refer to the Installation and Specification Guide, supplied in the winch kit, for all wiring schematics and specific details on how to wire this WARN product to your vehicle.
- **Never** overtighten u-bolt nuts. Overtightening may cause damage to vehicle frame.

Read installation and operating instructions thoroughly.

Table of Contents

I. Parts List.....3

II. Tools Required.....3

III. Installation.....4-6

IV. Maintenance/Care 7

©2009 Warn Industries, Inc.
WARN® and the WARN logo are trademarks of Warn Industries Inc.

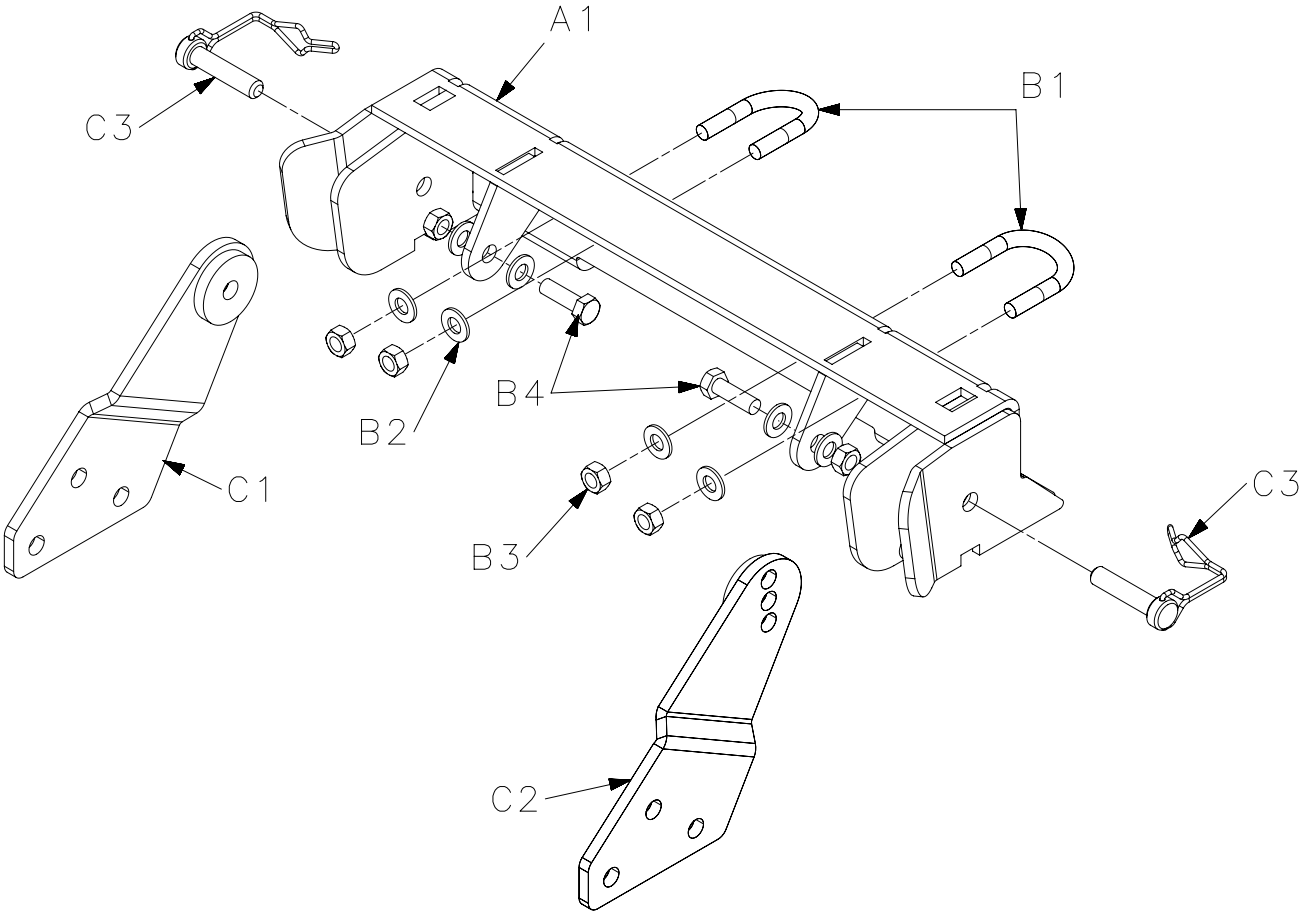

Figure 1

I. PARTS LIST

Ref	Description	Qty
A1	Plow Mounting Plate	1
B1	U-Bolt 5/16	2
B2	Flat Washer 5/16”	8
B3	Lock Nut 5/16”	6
B4	Capscrew 5/16-18	2
C1	Tab Plow RH Jogged	1
C2	Tab Plow LH Jogged	1
C3	Pin, Plow Retaining	2

II. TOOLS REQUIRED

- 3/8" Ratchet and 3-1/2" extension
- Sockets: 10mm, 1/2”
- Wrenches: 1/2"

©2009 Warn Industries, Inc.
WARN® and the WARN logo are trademarks of Warn Industries Inc.

III. INSTALLATION

1. Remove the four screws that secure the skid plate to the front bumper.

Figure 2

2. Use the 5/16 x 1” capscrews to secure the plow mount inner mounting tabs to the vehicle, as shown in Figure 3. Loosely secure the bolts using 5/16 flat washers and lock nuts. Refer to Figure 1.

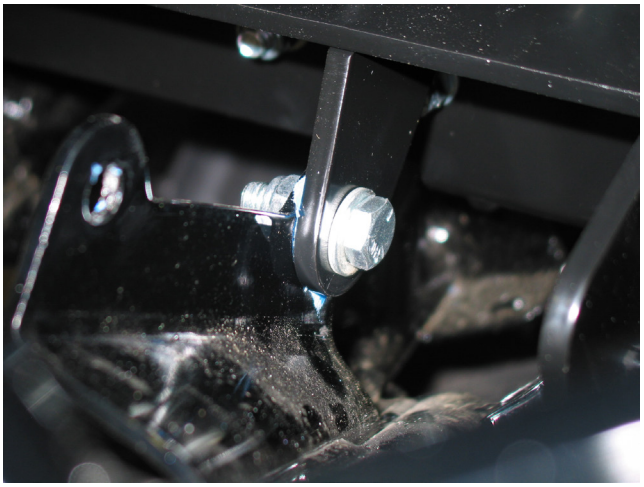

Figure 3

3. Use two 5/16 u-bolts to secure plow mount to vehicle frame tubes, as shown in Figure 4.
   NOTICE ***NEVER overtighten u-bolt nuts. Overtightening may cause damage to vehicle frame.***

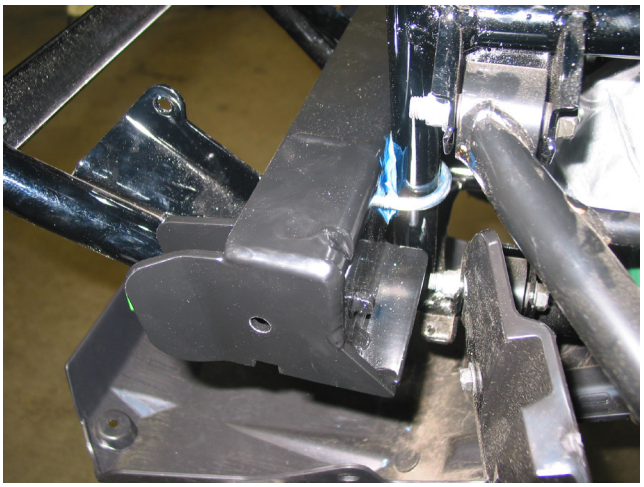

Figure 4

4. Tighten nuts snug, but do not overtighten.
   NOTICE ***NEVER overtighten u-bolt nuts. Overtightening may cause damage to vehicle frame.***

©2009 Warn Industries, Inc.
WARN® and the WARN logo are trademarks of Warn Industries Inc.

III. INSTALLATION cont.

5. Re-install the factory skid plate with original fasteners.

6. Install the plow mounting tabs (C1, C2) to plow tube assembly. Refer to Figure 5.

   Loosely install fasteners. Tighten the fasteners after the plow is assembled and installed in the mount per the plow assembly instructions. See Figure 6.

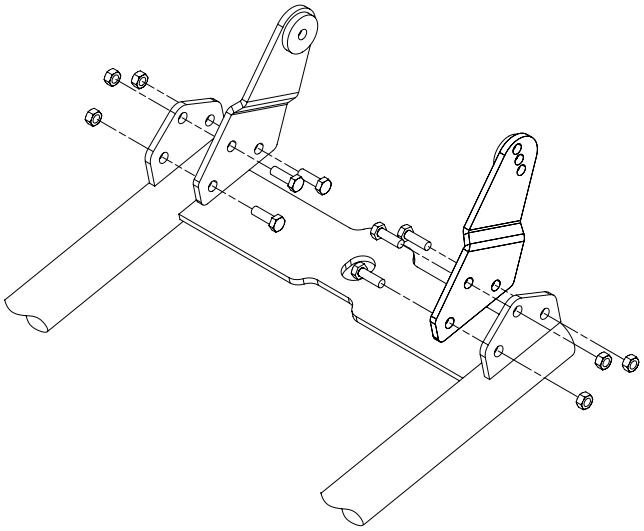

Figure 5

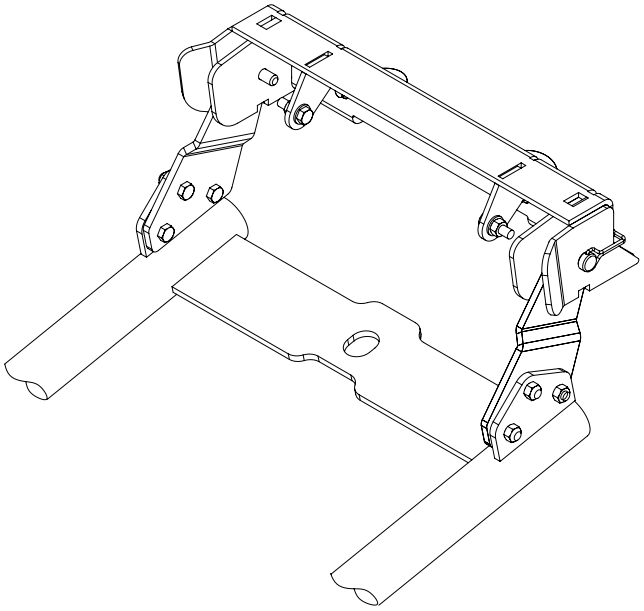

Figure 6

©2009 Warn Industries, Inc.
WARN® and the WARN logo are trademarks of Warn Industries Inc.

⚠ WARNING

FAILURE TO SECURELY TIGHTEN ALL BOLTS ON THE WINCH PLATE, WINCH, AND FAIRLEAD CAN RESULT IN PRODUCT FAILURE WHICH MAY RESULT IN VEHICLE DAMAGE AND OPERATOR INJURY OR DEATH. DOUBLE CHECK THAT ALL BOLTS ARE SECURELY TIGHTENED PRIOR TO USE.

⚠ WARNING

AVOID ALL MOVING AND POTENTIALLY HOT COMPONENTS OF ATV WHEN ROUTING ELECTRICAL CABLES. AVOID AREAS WHERE THE WIRING COULD BE PINCHED WHEN COMPONENTS ARE REINSTALLED. FAILURE TO DO SO CAN RESULT IN PRODUCT FAILURE WHICH CAN LEAD TO VEHICLE DAMAGE AND OPERATOR INJURY OR DEATH.

⚠ WARNING

READ THE VEHICLE'S OPERATOR MANUAL, WINCH OPERATOR MANUAL, AND ALL WARNING LABELS PRIOR TO OPERATION OF ATV AND WINCH.

IV. MAINTENANCE/CARE

1. Inspect all parts on the winch, winch mount, and related hardware prior to each use. Replace all hardware that appears rusted or deformed.

2. Inspect all nuts and bolts on the winch, winch mount,, and related hardware prior to each use. Tighten all nuts that appear to be loose. Stripped, fractured, or bent bolts or nuts need to be replaced.

3. Check all cables prior to use. Replace cables that look worn or frayed.

4. Check all moving or rotating parts. Remove debris that may inhibit the part from moving freely.

⚠ WARNING

PERFORM REGULAR INSPECTIONS ON THE WINCH, WINCH MOUNT, AND RELATED HARDWARE. NEVER OPERATE THE WINCH WITH DAMAGED OR MISSING PARTS. FAILURE TO FOLLOW THIS WARNING MAY CAUSE VEHICLE DAMAGE AND OPERATOR INJURY OR DEATH.

©2009 Warn Industries, Inc.
WARN® and the WARN logo are trademarks of Warn Industries Inc.