INSTALLATION INSTRUCTIONS
REAR CAB RACK WINCH MOUNT
Part Number: 112332

GENERAL SAFETY PRECAUTIONS

Your safety, and the safety of others, is very important. To help you make informed decisions about safety, we have provided installation and operating instructions and other information on labels and in this guide. This information alerts you to potential hazards that could hurt you or others. It is not possible to warn you about all potential hazards associated with this product, you must use your own good judgment.

CARELESS INSTALLATION AND OPERATION CAN RESULT IN SERIOUS INJURY OR EQUIPMENT DAMAGE. READ AND UNDERSTAND ALL SAFETY PRECAUTIONS AND OPERATING INSTRUCTIONS BEFORE INSTALLING AND OPERATING THIS PRODUCT.

This guide identifies potential hazards and has important safety messages that help you and others avoid personal injury or death. WARNING and CAUTION are signal words that identify the level of hazard. These signal words mean:

⚠**WARNING** signals a hazard that could cause serious injury or death, if you do not follow recommendations. ⚠**CAUTION** signals a hazard that may cause minor to moderate injury, if you do not follow recommendations.

This guide uses ***NOTICE*** to call attention to important mechanical information, and Note: to emphasize general information worthy of special attention.

⚠ WARNING

IMPACT AND MOVING PARTS ENTANGLEMENT HAZARD

Failure to observe these instructions could lead to severe injury or death

- **Always** take time to fully read the Instructions and/or Operations Guide, and/or Basic Guide to Winching Techniques, in order to understand your winch and its operations.
- **Always** use extreme caution when drilling on any vehicle. Make sure that all fuel lines, brake lines, electrical wires, and other objects are not punctured or damaged when/if drilling on the vehicle. Thoroughly inspect the area to be drilled (on both sides of material) prior to drilling, and relocate any objects that may be damaged. Failure to inspect the area to be drilled may result in vehicle damage, electrical shock, fire or personal injury.
- **Always** wear safety glasses when installing this kit. A drilling operation will cause flying metal chips. Flying chips can cause eye injury.
- **Always** use extreme caution when cutting and trimming during fitting.
- **Always** remove jewelry and wear eye protection.
- **Never** lean over battery while making connections.
- **Never** route electrical cables:
  - Across any sharp edges.
  - Through or near moving parts.
  - Near parts that become hot.
- **Always** insulate and protect all exposed wiring and electrical terminals.
- **Always** install terminal boots as directed in installation instructions.
- **Always** use appropriate and adequate care in lifting components into place.
- **Always** insure components will remain secure during installation and operation.
- **Always** tighten all nuts and bolts securely, per the installation instructions.
- **Always** perform regular inspections and maintenance on the plow mechanism, fasteners, cable and related hardware.
- **Always** replace all worn or damaged parts before operating.
- **Never** operate this WARN product with damaged or missing parts..
- **Always** ensure the RED key-on (switched) wire is connected to a wire that is fused. This is crucial for protecting the vehicle's electrical system from shorts and overloads.

Read installation and operating instructions thoroughly.

WARN INDUSTRIES, INC. 12900 S.E. Capps Road,
Clackamas, OR USA 97015-8903, 1-503-722-1200, FAX: 1-503-722-3000
Customer Service: 1-800-543-9276
Dealer Locator Service: 1-800-910-1122
International Sales/Customer Service: 1-503-722-3008
International Fax: 1-503-722-3005

©2025 Warn Industries, Inc. WARN® and the WARN logo are trademarks of Warn Industries Inc.

⚠ CAUTION

MOVING PARTS ENTANGLEMENT HAZARD

Failure to observe these instructions could lead to minor or moderate injury

- **Always** take time to fully read and understand the installation and Operations Guide included with this product.
- **Never** operate this product if you are under 16 years of age.
- **Never** operate this product when under the influence of drugs, alcohol or medications.

Read installation and operating instructions thoroughly.

NOTICE

EQUIPMENT DAMAGE

- **Always** refer to the Installation and Specification Guide, supplied in the winch kit, for all wiring schematics and specific details on how to wire this WARN product to your vehicle.
- **Never** overtighten u-bolt nuts. Overtightening may cause damage to vehicle frame.

Read installation and operating instructions thoroughly.

TABLE OF CONTENTS

Tools Required ..... page 2
Parts List ..... page 3
Torque Specifications ..... page 3
Installation ..... page 4-6
Maintenance/Care ..... page 6

BEFORE YOU BEGIN

- **Never exceed winch rated capacity of 2,500 lb.**

TOOLS REQUIRED

- Standard wrenches and sockets
- Metric wrenches and sockets
- Ratchet

©2025 Warn Industries, Inc. WARN® and the WARN logo are trademarks of Warn Industries Inc.

PARTS LIST

ITEM	PART NO.	DESCRIPTION	QTY
A1	112515	WINCH MOUNT	1
A2	112521	COVER PLATE	1
A3	102636	FAIRLEAD BRACKET	1
B1	69771	M8-1.25 X 25MM BOLT	12
B2	112548	M8-1.25 HEX FLANGE NUT	12
B3	69734	6MM X 1.0 SCREW	4

NOT SHOWN

ITEM	PART NO.	DESCRIPTION	QTY
C1	13231	CABLE TIE	24
C2	112537	BLACK CABLE	1
C3	87152	BLUE CABLE	1
C4	112538	RED CABLE	1
C5	79993	YELLOW CABLE	1
C6	89410	REMOTE	1
C7	89350	REMOTE SOCKET WIRE HARNESS	1
C8	83485	REMOTE SWITCH	1
C9	111831	3/8 RUBBER GROMMET	2

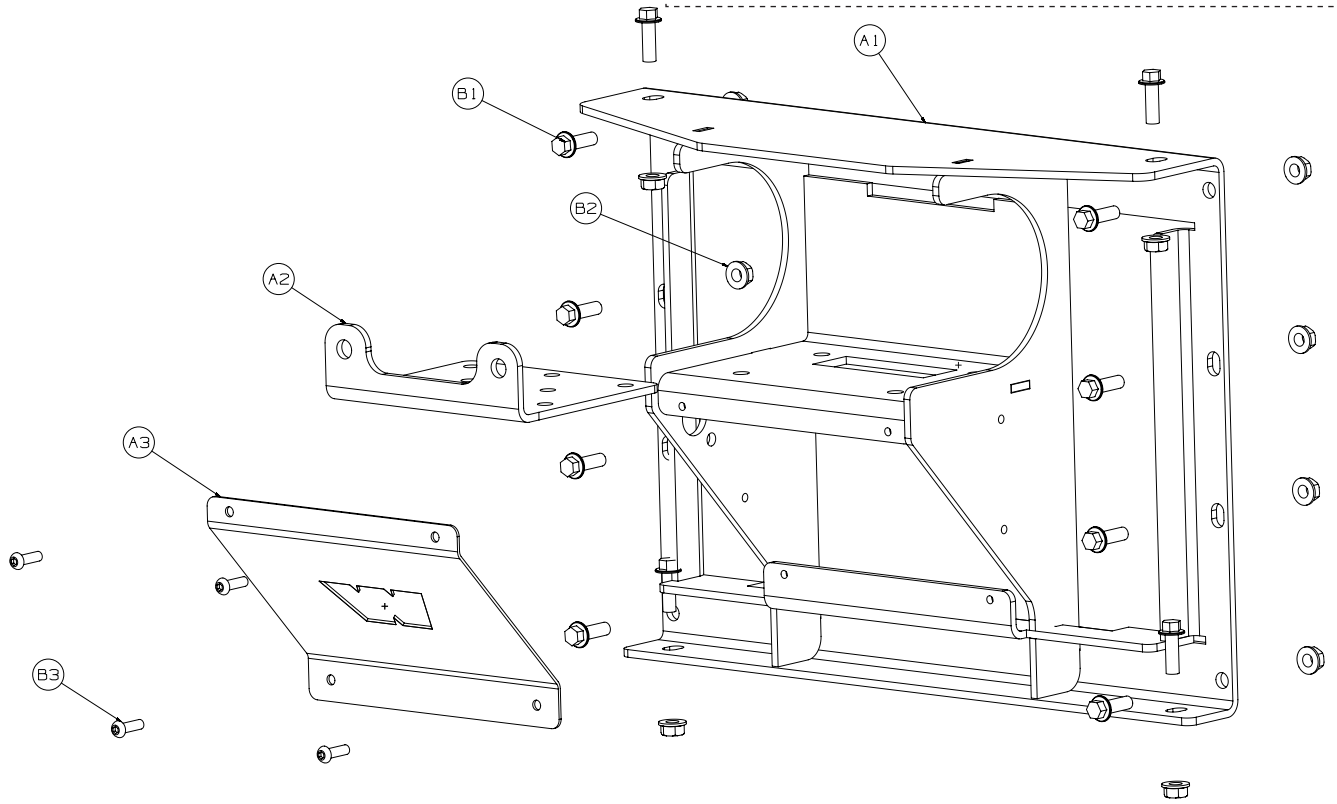

TORQUE SPECIFICATIONS

Please use the recommended torque specifications when assembling this product unless otherwise specified in the instructions.

FASTENER SIZE	FASTENER TORQUE		FASTENER SIZE	FASTENER TORQUE	
	lb-ft	(N.m)		lb-ft	(N.m)
1/4"	8	(11)	M4	(2)	3
5/16"	17	(23)	M5	(4.5)	6
3/8"	30	(40)	M6	(7.5)	10
7/16”	48	(66)	M8	(18)	25
1/2"	74	(100)	M10	(37)	50
9/16”	106	(144)			
5/8"	148	(200)			
3/4”	269	(364)			

©2025 Warn Industries, Inc. WARN® and the WARN logo are trademarks of Warn Industries Inc.

PREPARATION:

- Place the vehicle on a secure and level surface.
- Set the parking brake.
- Disconnect battery. Refer to the service manual.

BEGIN:

1. Find the contactor and contactor hardware from your winch kit.
2. Locate your black (C2), red (C4), yellow (C5) and blue (C3) cables supplied in this kit. Install a terminal boot (***included in winch kit***) to each end. ***NOTE: Do not use the cables provided in the winch kit***.
3. Fasten ring terminal ends of the yellow, blue, red and black cables to coordinating terminals on the contactor with a lock washer and nut (***supplied in winch kit***). Torque to recommended value and seat boots over terminals.

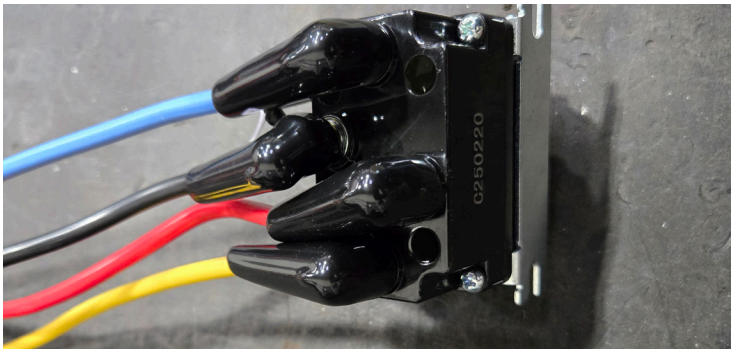

4. Mount the fairlead to the fairlead bracket (A3) using hardware supplied in winch kit.
5. Place the winch on top of the fairlead bracket.
6. Thread the winch rope through the fairlead opening.
7. Connect your hook and strap to the winch rope.

8. Set the winch/fairlead bracket assembly into the pocket of the cab rack winch mount.
9. Secure the winch/fairlead assembly using the hardware provided in the winch kit.

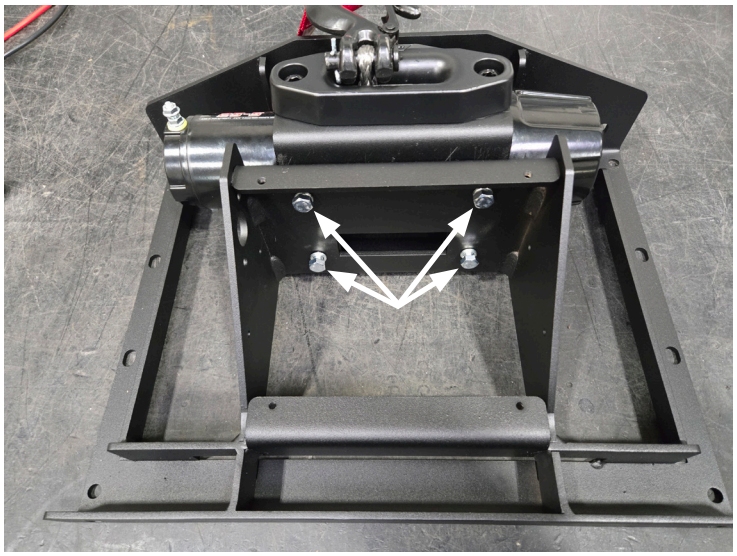

10. Install the contactor to the cab rack winch mount, using the hardware from your winch kit. *TIP: Rotate the mount assembly to the clutch side of the winch. Set a couple of blocks under it to hold in place.*
11. Attach the other end of the yellow and blue cables to the coordinating motor terminals on the winch using the lock nuts, supplied in the winch kit. Tighten to recommended torque.
12. Seat boots over winch motor terminals.

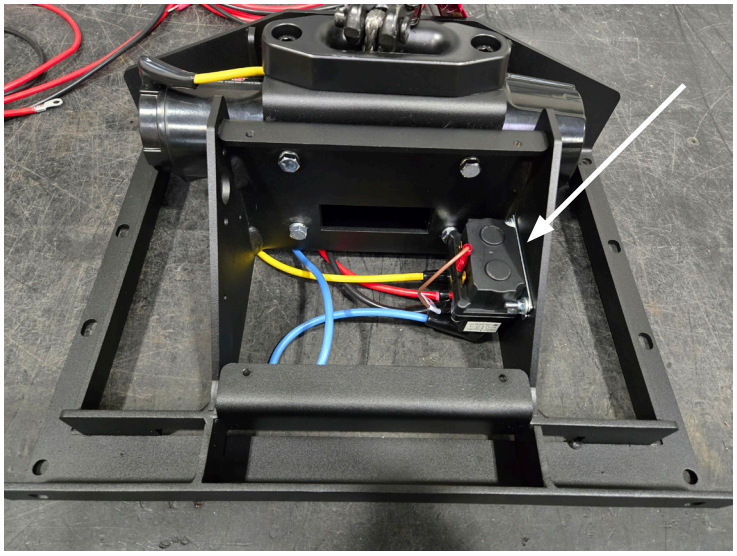

©2025 Warn Industries, Inc. WARN® and the WARN logo are trademarks of Warn Industries Inc.

13. From the outside of the winch mount, thread the cables from the remote socket wire harness (C7) through the remote socket installation hole.
14. Secure the remote socket to the mount using hardware included in the winch kit.

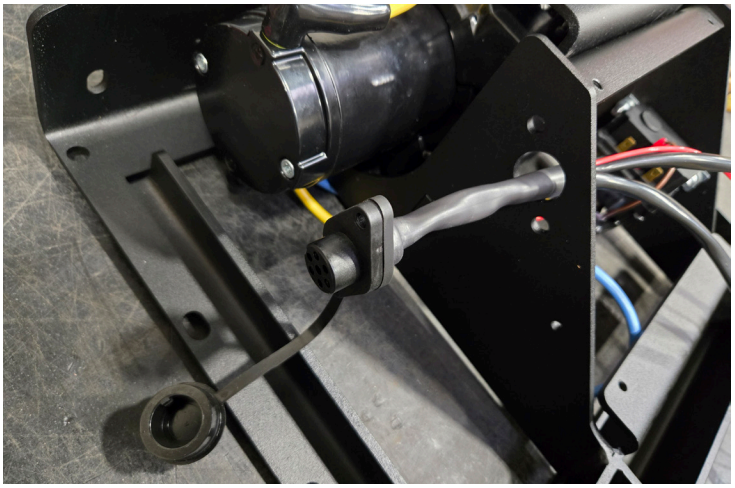

15. The remote harness will have a single red switch wire and two wire bundles (short and long).
16. Run the red switch wire and the short wire bundle towards the back of the winch mount following the contactor cables.
17. Attach the long harness wires to the correct colored contactor wire spades (black and green).

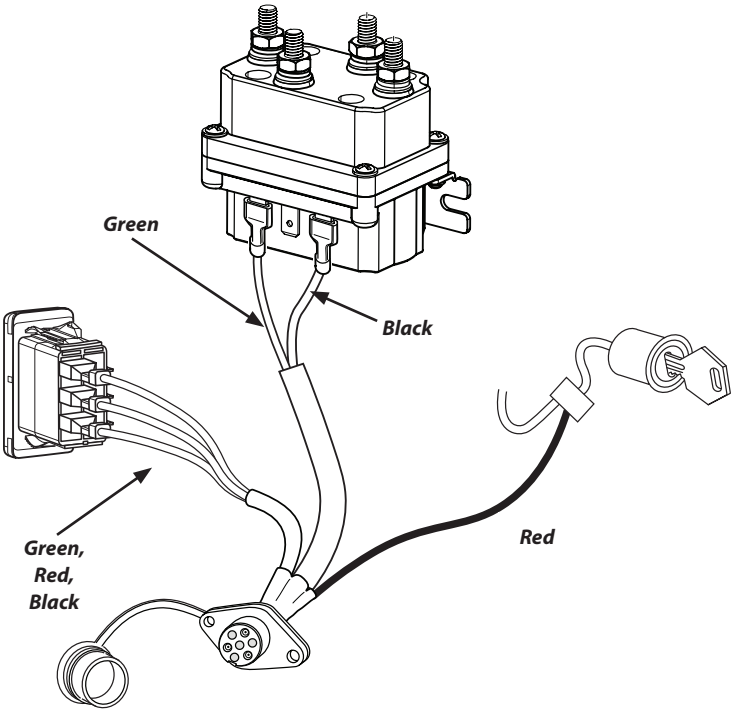

18. Coil the rest of the harness cable lengths and zip tie together with the provided zip ties and tuck with contactor.

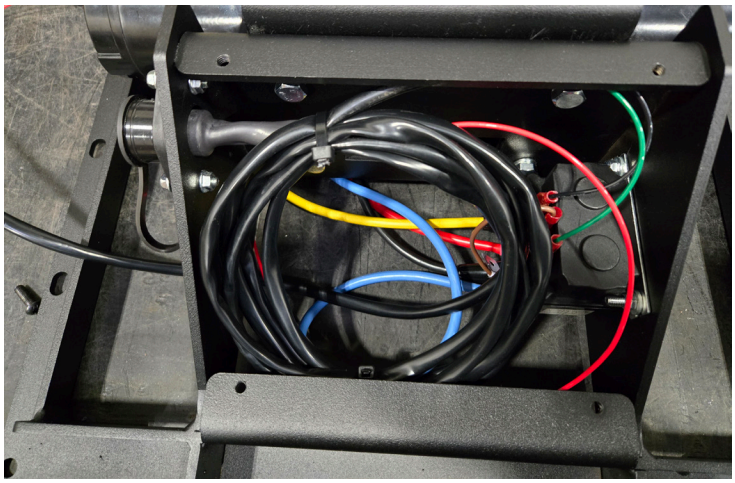

19. Attach the cover plate (A2) over the contactor and wires using the M6 screws (B3).

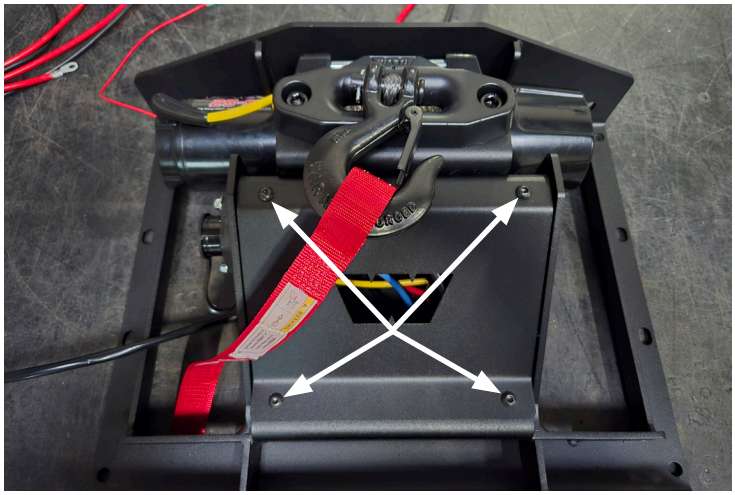

20. Carefully lift the winch mount assembly up into the rear cab rack frame and rest it on the lower cross support flange.
21. Insert two of the M8 bolts (B1) in the top mounting holes. *This will hold it in place until you can install the rest of the hardware*. Do not tighten completely.

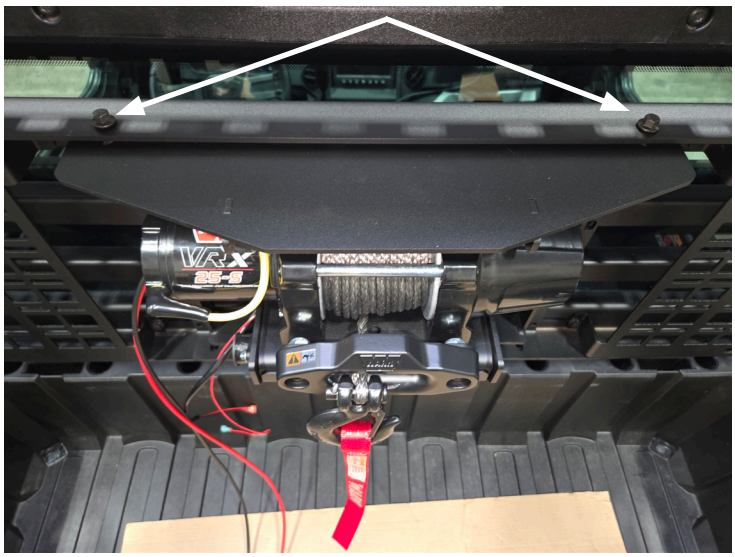

©2025 Warn Industries, Inc. WARN® and the WARN logo are trademarks of Warn Industries Inc.

22. Make sure all the cables are clear from being pinched. *TIP: Route the wires between the second and third cross bars*.
23. Making sure all wires are clear of being pinched, continue around the mount, installing the rest of the hardware (B1 and B2).
24. Tighten all the hardware at this time.

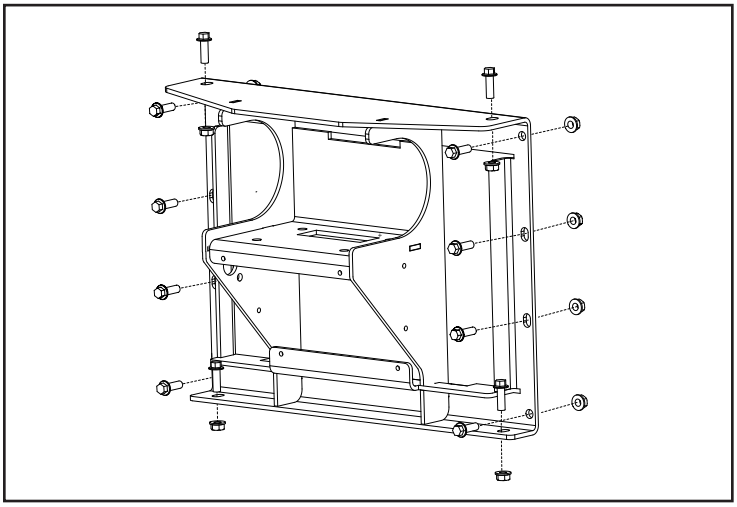

25. With the "winch in" symbol on top, install the switch into the side of the rack.

26 Connect the short harness bundle's wires to the back of the switch in this order: top spade - green, middle - red, bottom - black.

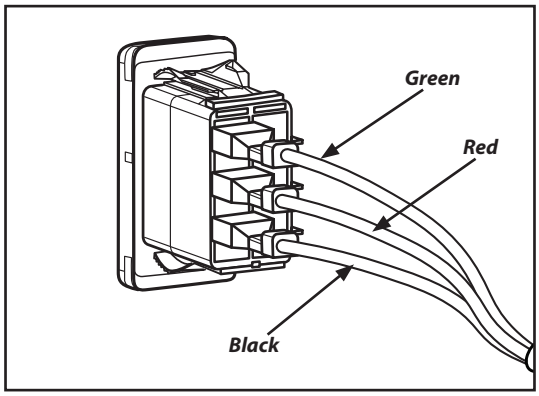

Complete your winch wiring following your specific vehicle cab rack winch mounting instruction.

MAINTENANCE / CARE

1. Inspect all parts on the winch, winch mount, and related hardware prior to each use. Replace all hardware that appears rusted or deformed.

2. Inspect all nuts and bolts on the winch, winch mount,, and related hardware prior to each use. Tighten all nuts that appear to be loose. Stripped, fractured, or bent bolts or nuts need to be replaced.

3. Check all cables prior to use. Replace cables that look worn or frayed.

4. Check all moving or rotating parts. Remove debris that may inhibit the part from moving freely.

©2025 Warn Industries, Inc. WARN® and the WARN logo are trademarks of Warn Industries Inc.