INSTALLATION INSTRUCTIONS
REAR BUMPER WINCH KIT
Part Number: 112273
Application: 2025 + Polaris Ranger

GENERAL SAFETY PRECAUTIONS

Your safety, and the safety of others, is very important. To help you make informed decisions about safety, we have provided installation and operating instructions and other information on labels and in this guide. This information alerts you to potential hazards that could hurt you or others. It is not possible to warn you about all potential hazards associated with this product, you must use your own good judgment.

CARELESS INSTALLATION AND OPERATION CAN RESULT IN SERIOUS INJURY OR EQUIPMENT DAMAGE. READ AND UNDERSTAND ALL SAFETY PRECAUTIONS AND OPERATING INSTRUCTIONS BEFORE INSTALLING AND OPERATING THIS PRODUCT.

This guide identifies potential hazards and has important safety messages that help you and others avoid personal injury or death. WARNING and CAUTION are signal words that identify the level of hazard. These signal words mean:

⚠**WARNING** signals a hazard that could cause serious injury or death, if you do not follow recommendations. ⚠**CAUTION** signals a hazard that may cause minor to moderate injury, if you do not follow recommendations.

This guide uses ***NOTICE*** to call attention to important mechanical information, and Note: to emphasize general information worthy of special attention.

⚠ WARNING

IMPACT AND MOVING PARTS ENTANGLEMENT HAZARD

Failure to observe these instructions could lead to severe injury or death

- **Always** Know Your Winch. Take time to fully read the Instructions and/or Operations Guide, and/or Basic Guide to Winching Techniques, in order to understand your winch and its operations.
- **Never** work under vehicle before properly securing vehicle.
- **Always** use appropriate and adequate care in lifting components into place.
- **Never** use a jack to support the vehicle.
- **Always** use jack stands in pairs to support the vehicle.
- **Always** use jacks or jack stands only on a hard, stable, and level surface.
- **Never** exceed the rated capacity of a jack or jack stands.
- **Always** verify that the parking brake is set, the transmission is in park (automatic) or reverse (manual) and the rear wheels are blocked before working on vehicle.
- **Never** work under vehicle before properly securing vehicle.
- **Always** use appropriate and adequate care in lifting components into place.
- **Always** insure components will remain secure during installation and operation.
- **Always** tighten all nuts and bolts securely, per the installation and operation.
- **Always** perform regular inspections and maintenance on the winch, winch mount and related hardware.
- **Always** replace all worn or damaged parts before operating.
- **Never** operate this WARN product with damaged or missing parts.
- **Always** use extreme caution when drilling on any vehicle. Make sure that all fuel lines, brake lines, electrical wires, and other objects are not punctured or damaged when / if drilling on the vehicle. Thoroughly inspect the area to be drilled (on both sides of material) prior to drilling, and relocate any objects that may be damaged. Failure to inspect the area to be drilled may result in vehicle damage, electrical shock, fire or personal injury.
- **Always** use extreme caution when cutting and trimming during fitting.
- **Always** wear safety glasses when installing this kit. A drilling operation will cause flying metal chips. Flying chips can cause eye injury.
- **Always** remove jewelry and wear eye protection.
- **Never** lean over battery while making connections.
- **Never** route electrical cables across any sharp edge, through or near moving parts, near parts that become hot.

Read installation and operating instructions thoroughly.

WARN INDUSTRIES, INC. 12900 S.E. Capps Road,
Clackamas, OR USA 97015-8903, 1-503-722-1200, FAX: 1-503-722-3000
Customer Service: 1-800-543-9276
Dealer Locator Service: 1-800-910-1122
International Sales/Customer Service: 1-503-722-3008
International Fax: 1-503-722-3005

©2025 Warn Industries, Inc. WARN® and the WARN logo are trademarks of Warn Industries Inc.

⚠ CAUTION

MOVING PARTS ENTANGLEMENT HAZARD

Failure to observe these instructions could lead to minor or moderate injury

- Part edges may be sharp!
- **Always** use proper posture / lifting technique or get lifting assistance while handling and installing product.

Read installation and operating instructions thoroughly.

NOTICE

EQUIPMENT DAMAGE

- **Never** tow vehicle by attaching a tow bar to the eyelets on the bumper.
- Do not attach tow bars directly to the bumper. Damage to bumper may occur. WARN bumpers are not designed to be used for flat towing. Consult with the manufacturer of your tow bar system for the proper vehicle tow bar brackets.

Read installation and operating instructions thoroughly.

TABLE OF CONTENTS

Tools Required ..... page 2
Parts List ..... page 3
Torque Specifications ..... page 3
Installation ..... page 4-9
Maintenance/Care ..... page 9

BEFORE YOU BEGIN

This product may interfere with driver assist systems such as adaptive cruise control and parking assist systems that have sensors or cameras installed in the bumpers or front grill area. If your vehicle is equipped with any of these systems or features, consult your vehicle owner's manual before installing this product. These systems may need to be disabled as a result of installing this product.

TOOLS REQUIRED

- Standard wrenches and sockets
- Metric wrenches and sockets
- Ratchet
- Cutting tool
- Wire stripper

©2025 Warn Industries, Inc. WARN® and the WARN logo are trademarks of Warn Industries Inc.

PARTS LIST

ITEM	PART NO.	DESCRIPTION	QTY	ITEM	PART NO.	DESCRIPTION	QTY
A1	112274	BUMPER FRAME BRACKET	1	B1	71588	M8-1.25 FLANGE NUT	12
A2	112298	BUMPER	1	B2	69771	M8-1.25 X 25MM HEX CPSCR	8
A3	112423	CONTACTOR BRACKET	1	B3	112424	M8-1.25 X 45MM HEX CPSCR	4
				(NOT SHOWN)	79154	M6-1.0 FLANGE NUT	2
				(NOT SHOWN)	13231	CABLE TIES	24

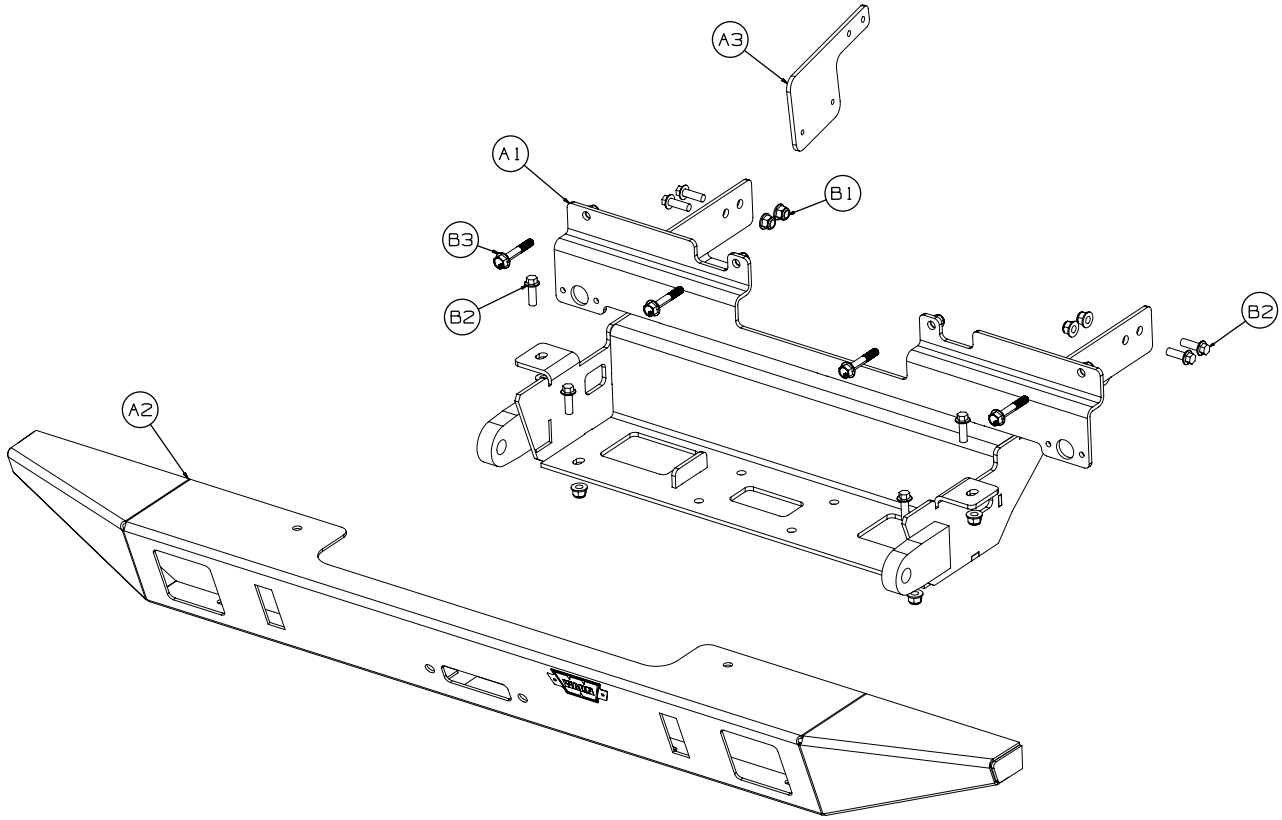

TORQUE SPECIFICATIONS

Please use the recommended torque specifications when assembling this product unless otherwise specified in the instructions.

FASTENER SIZE	FASTENER TORQUE		FASTENER SIZE	FASTENER TORQUE	
	lb-ft	(N.m)		lb-ft	(N.m)
1/4"	8	(11)	M4	(2)	3
5/16"	17	(23)	M5	(4.5)	6
3/8"	30	(40)	M6	(7.5)	10
7/16”	48	(66)	M8	(18)	25
1/2"	74	(100)	M10	(37)	50
9/16”	106	(144)			
5/8"	148	(200)			
3/4”	269	(364)			

©2025 Warn Industries, Inc. WARN® and the WARN logo are trademarks of Warn Industries Inc.

PREPARATION:

- Shift vehicle transmission into "PARK". Turn ignition key to "OFF" position and remove key from ignition switch.
- Flip the passenger seat up and remove the tray to expose the battery. Disconnect black negative (-) cable from battery.

1. Remove tailgate by removing the support cables on each side, then lower tailgate almost to level and pull out on the each side slightly to remove completely.

2. Remove the six center torx button head screws from the rear of the vehicle.

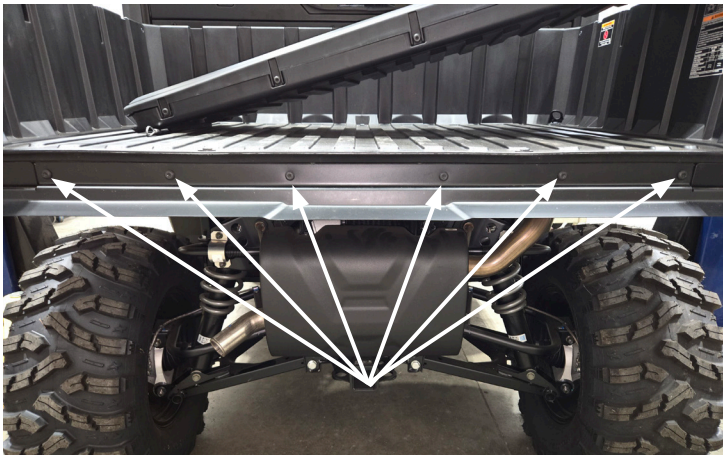

3. From under the bed, remove the two bolts from each side to remove the plate. Set aside hardware and plate. You will reuse.

4. Continuing from underneath the bed, remove the harness clips holding the wire harness to the rear part of the frame. *TIP: You only need to remove the harness clips where the new mount will be located. The center clip does not need to be removed.*

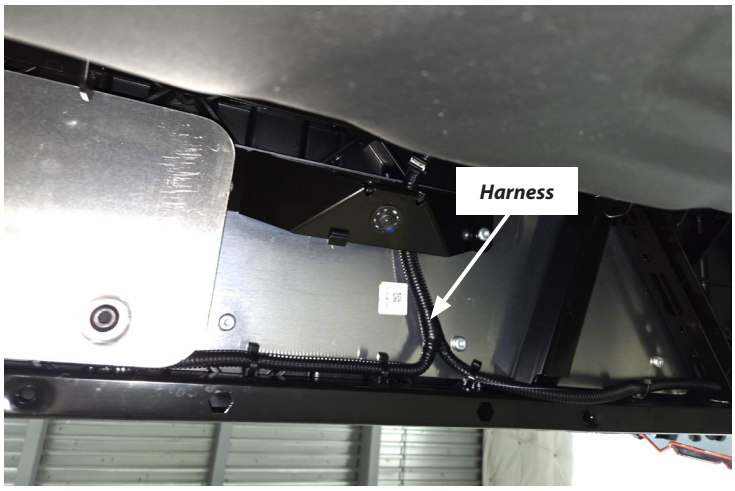

⚠ WARNING Always use extreme caution when drilling on any vehicle. Make sure that all fuel lines, brake lines, electrical wires, and other objects are not punctured or damaged when / if drilling on the vehicle. Thoroughly inspect the area to be drilled (on both sides of material) prior to drilling, and relocate any objects that may be damaged. Failure to inspect the area to be drilled may result in vehicle damage, electrical shock, fire or personal injury.

5. Using a 9mm or a 23/64 drill bit, carefully drill out the four center torx head screws on the edge of the bed. Go all the way through the rear frame, but be careful not to drill through the wire harness you unclipped in a previous step. *TIP: Make sure while you are drilling, keep the drill as straight as possible.*

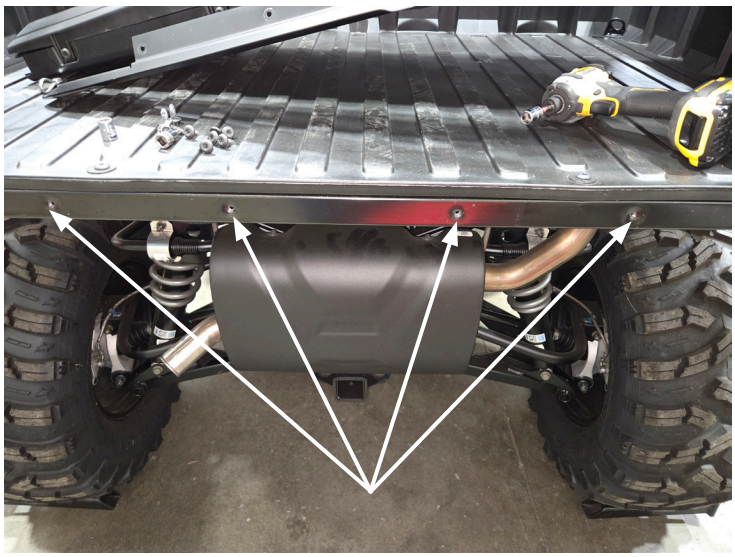

©2025 Warn Industries, Inc. WARN® and the WARN logo are trademarks of Warn Industries Inc.

6. Trim the heat shield edge back about an 1/8 to a 1/4 inch, to allow for the bumper bracket to pass through. *TIP: A disk sander works well for this.*

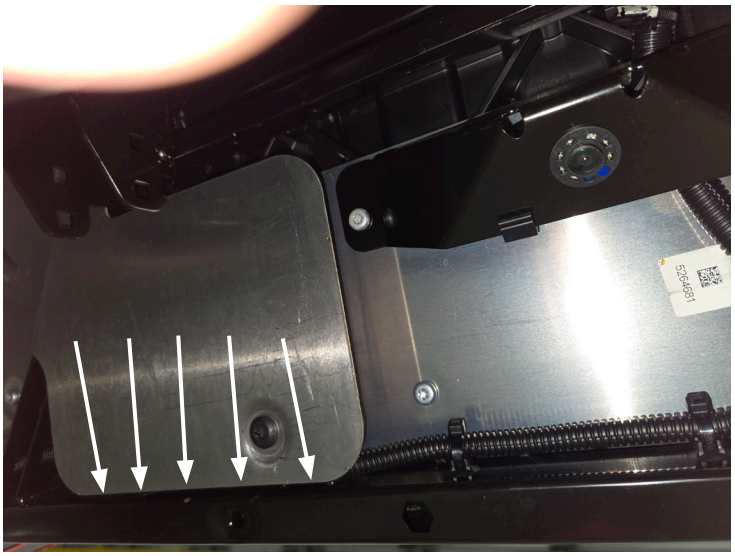

7. If your sxs is equipped with a camera, you may want to relocate by first removing the two screws holding it in place. *TIP: There are aftermarket harnesses available (sold separately) to aid in relocating the camera.*

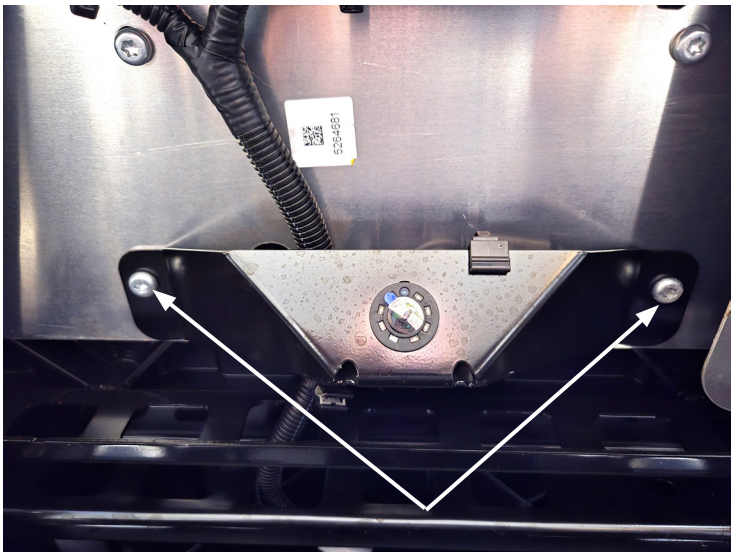

8. Position the bumper frame bracket (A1) up to vehicle.

9. Insert one M8 bolt (B2) through the frame bracket's most rear mounting hole and the vehicle frame mounting hole in front of the bed pivot bolt.

10 Carefully, let the bracket hang down until you can get a nut started on each bolt. ***NOTE: Some models will have rear exhaust mufflers that the bracket can rest on, otherwise let the bracket hang down naturally.***

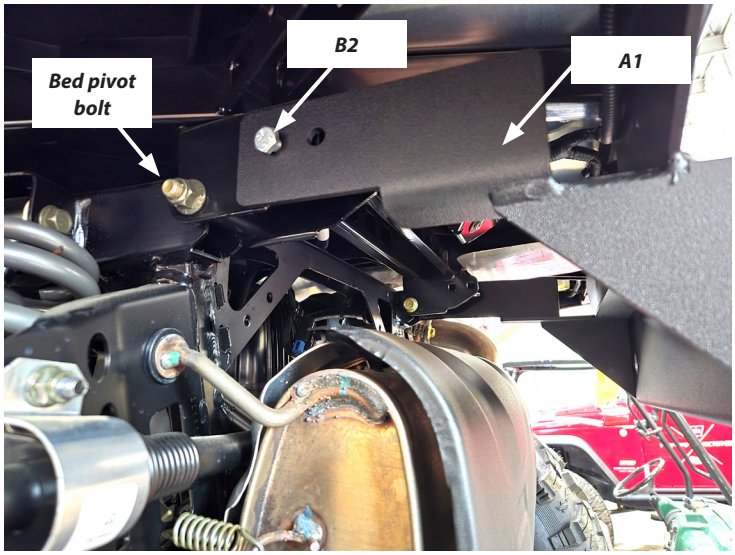

11. Swing the bracket up to the final position, insert one M8-1.25 X 45mm bolt (B3) through the middle bed hole and bracket to hold bracket in place temporarily.

    Next, install the second M8 bolt (B2) into the remaining bracket hole and secure with one nut (B1), *each side*. ***Do not tighten completely to allow for adjustment***.

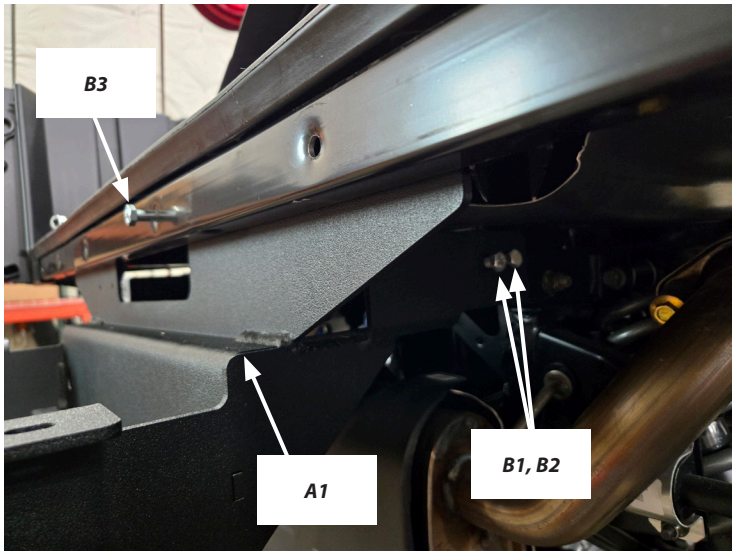

©2025 Warn Industries, Inc. WARN® and the WARN logo are trademarks of Warn Industries Inc.

12. Drill the four-center holes of the metal shield you previously removed.

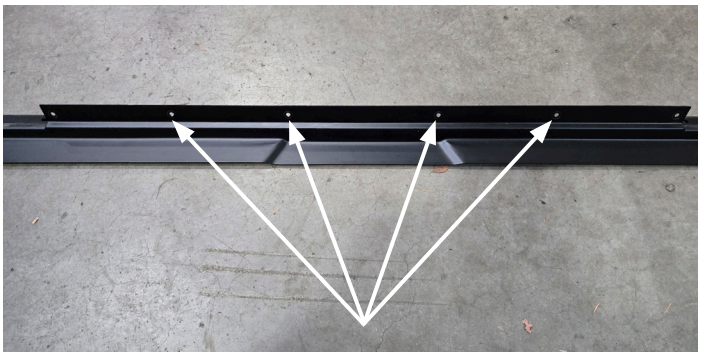

13. Remove the center bolt holding the bumper bracket up.
14. Position the metal shield back into place and install the four M8 bolts (B3) in those four center drilled out hole locations. Secure with four nuts (B1). ***Do not tighten completely.***
15. Re-Install the two bolts to each under side of bed.

16. Tighten **ALL** hardware at this time. ***NOTE: Be careful to not over tighten hardware to avoid potentially crushing the frame tube you previously drilled out.***
17. Locate the contactor (supplied with winch) and the contactor bracket (A3).

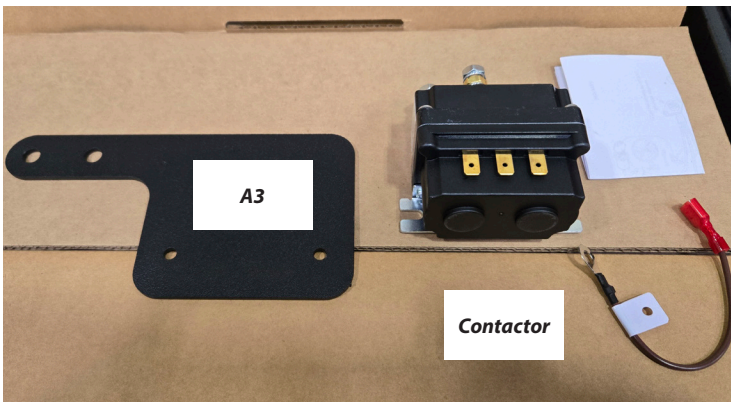

18. Attach the contactor to the bracket using hardware supplied with contactor.

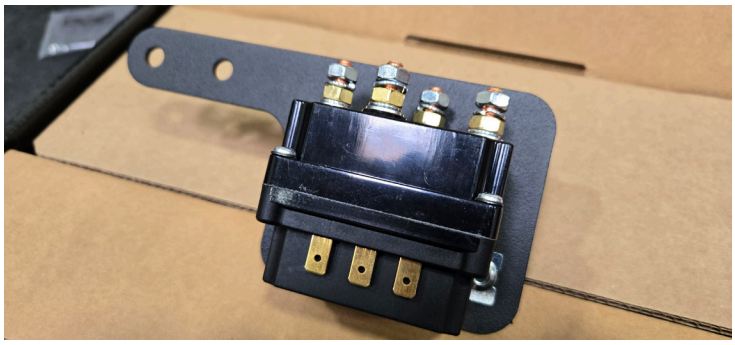

19. Remove the two coil bracket bolts. Slide the contactor bracket over the coil bracket and re-install the bolts, to secure both brackets to the vehicle frame.

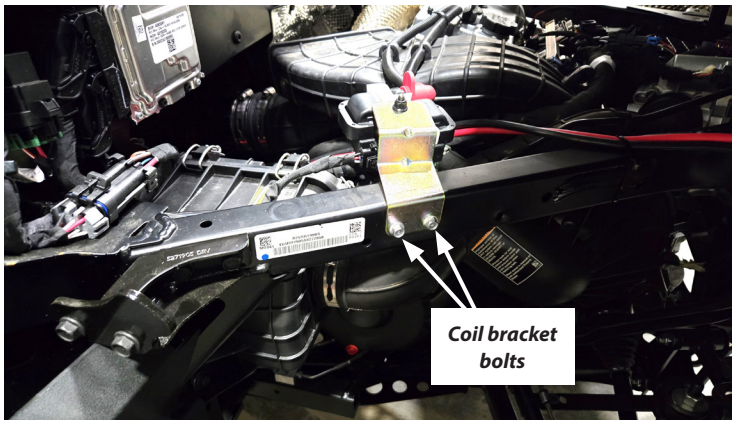

20. Locate your yellow, blue, red and black winch cables and install a terminal boot to each end.
21. Fasten ring terminal ends of each cable to the coordinating terminals on the contactor with lock washer and nut. Torque to recommended value and seat boots over terminals.
22. Route the yellow and blue cables towards the rear of the vehicle and route the red and black cables through the tunnel to the battery. ***NOTE: Make sure to route wires/cables away from sharp edges, heat and moving parts. NOTE: Zip tie along the way to keep cables/ wiring in place.***

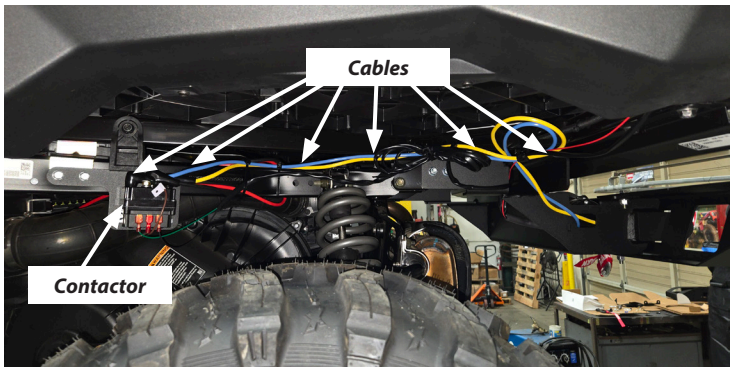

©2025 Warn Industries, Inc. WARN® and the WARN logo are trademarks of Warn Industries Inc.

23. Mount the remote plug harness (*included in winch kit*) to the bumper bracket location shown.

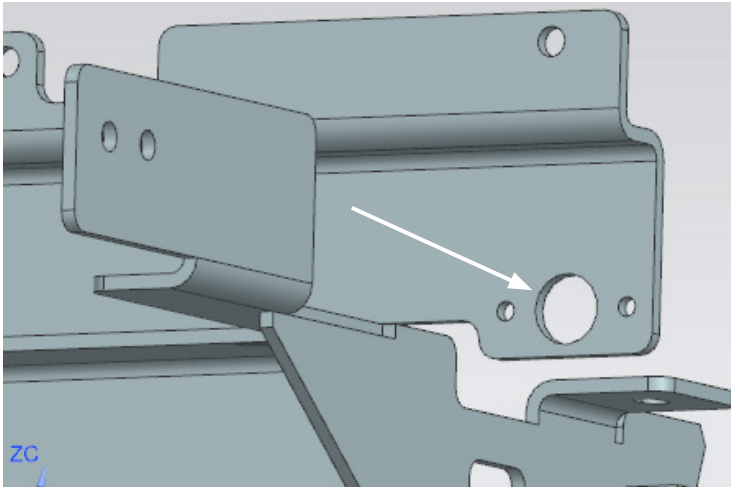

24. Place your winch on the frame bracket, lining up the mounting holes. Secure winch according to your winch installation instructions.

25. Install the yellow and blue cables to the winch motor following the winch installation instructions. Seat boots over terminals.

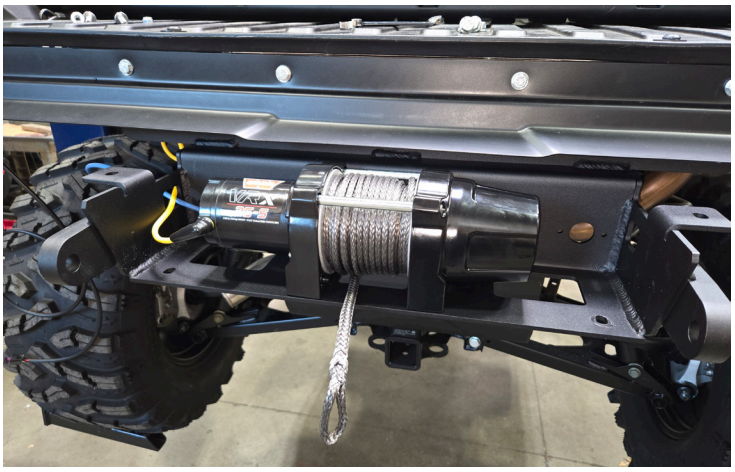

26. Install your fairlead to the bumper (with hardware included with fairlead).

27. Attach the bumper using four of the M8 bolts (B2) and flange nuts (B1).

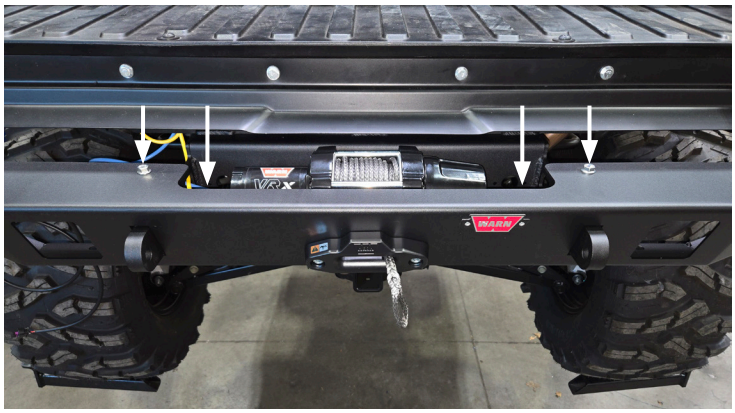

28. With battery compartment exposed, carefully reach in the tunnel and pull out the red and black cables you routed earlier.

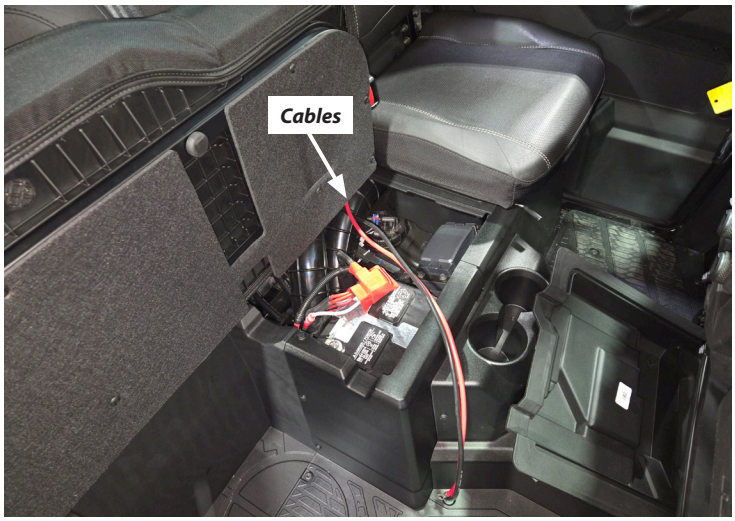

29. Attach the black ground wire first then the red wire to the factory auxiliary M6 posts with the provided M6 flange nuts.

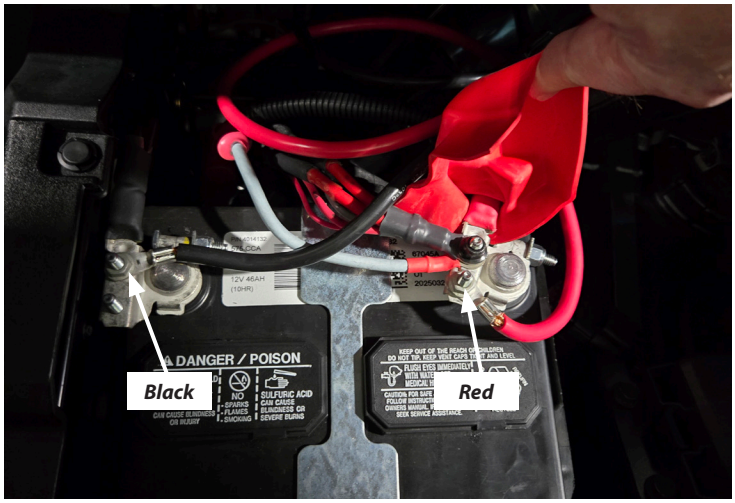

©2025 Warn Industries, Inc. WARN® and the WARN logo are trademarks of Warn Industries Inc.

OPTIONAL: DASH SWITCH MOUNTING:

You may mount your dash switch on the inside cab *(requiring the harness extension kit PN 100753)* or in the rear of the vehicle.

NOTE: If you choose to not hook the switch up and operate by remote plug only, you will still need to hook the small red wire from your harness to a key switch trigger wire. Refer to winch manual.

30. Remove the two bolts to release the taillight from the plastic. *TIP: It will take some pulling and wiggling to get it to completely release*. This allows you to look into the pocket.

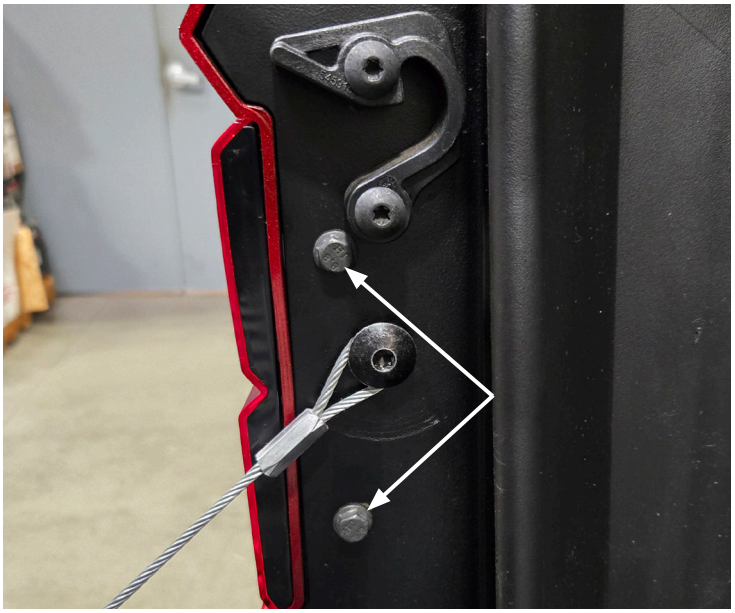

31. Once you have made a decision on mounting location. Mark out the dimensions of the switch (refer to winch manual for dimensions). *TIP: Keep the top of the rectangular hole below the top edge of the bed by at least 4 ½ inches.*
32. With cutting tool, carefully cut out marked area. *TIP: Stay on the inside of marked line when cutting, you can always file out more or trim as needed.*
33. Carefully feed the switch connector plug through the opening.

34. With the tail light removed, test for key switch power. *TIP: It should be the red and orange wire.*
35. Find your remote plug harness red wire and route towards tail light.
36. Peel back the harness casing and strip the key switch hot wire from the taillight. Solder a pigtail in or use a scotch clip to join the two wires together.

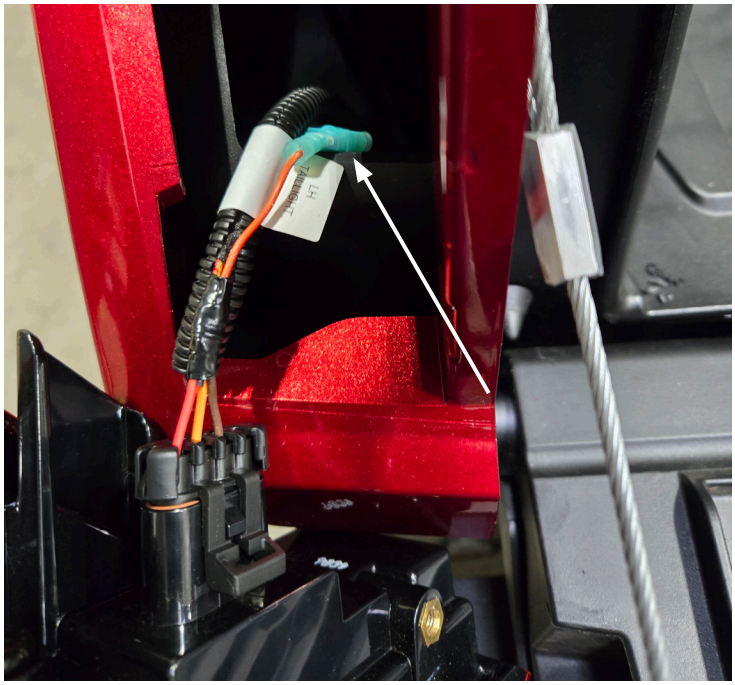

37. Plug your switch into connector and carefully push cable back down through the hole until the switch is seated completely into cutout.

38. Confirm that there are no exposed wires or terminals. Install cable ties as needed to secure loose cables and wires up and out of the way.
39. Reconnect battery negative cable.
40. Install abrasion sleeve on winch rope (if applicable), hook and hook strap.
41. Turn ignition switch to ON. Have a second person watch the winch cable and verify that the switch is functioning correctly when it is

©2025 Warn Industries, Inc. WARN® and the WARN logo are trademarks of Warn Industries Inc.

pushed to spool cable in and pushed to spool cable out.

42. Plug in wired remote and verify it is functioning properly.
43. Once all is confirmed and correct, re-install battery box tray, passenger seat, tail light and tailgate.

Your winch install is now complete.

MAINTENANCE / CARE

1. Inspect all parts on the winch, winch mount, and related hardware prior to each use. Replace all hardware that appears rusted or deformed.

2. Inspect all nuts and bolts on the winch, winch mount,, and related hardware prior to each use. Tighten all nuts that appear to be loose. Stripped, fractured, or bent bolts or nuts need to be replaced.

3. Check all cables prior to use. Replace cables that look worn or frayed.

4. Check all moving or rotating parts. Remove debris that may inhibit the part from moving freely.

CARELESS INSTALLATION AND OPERATION CAN RESULT IN SERIOUS INJURY OR EQUIPMENT DAMAGE. READ AND UNDERSTAND ALL SAFETY PRECAUTIONS AND OPERATING INSTRUCTIONS BEFORE INSTALLING AND OPERATING THIS PRODUCT.

©2025 Warn Industries, Inc. WARN® and the WARN logo are trademarks of Warn Industries Inc.