INSTALLATION INSTRUCTIONS
PLOW MOUNTING KIT
Part Number: 111697
Application: 2012+ Polaris Ranger 400,500,800HD

GENERAL SAFETY PRECAUTIONS

Your safety, and the safety of others, is very important. To help you make informed decisions about safety, we have provided installation and operating instructions and other information on labels and in this guide. This information alerts you to potential hazards that could hurt you or others. It is not possible to warn you about all potential hazards associated with this product, you must use your own good judgment.

CARELESS INSTALLATION AND OPERATION CAN RESULT IN SERIOUS INJURY OR EQUIPMENT DAMAGE. READ AND UNDERSTAND ALL SAFETY PRECAUTIONS AND OPERATING INSTRUCTIONS BEFORE INSTALLING AND OPERATING THIS PRODUCT.

This guide identifies potential hazards and has important safety messages that help you and others avoid personal injury or death. WARNING and CAUTION are signal words that identify the level of hazard. These signal words mean:

⚠WARNING signals a hazard that could cause serious injury or death, if you do not follow recommendations. ⚠CAUTION signals a hazard that may cause minor to moderate injury, if you do not follow recommendations.

This guide uses NOTICE to call attention to important mechanical information, and Note: to emphasize general information worthy of special attention.

⚠ WARNING

Impact and Moving Parts Entanglement Hazard

FAILURE TO OBSERVE THESE INSTRUCTIONS COULD LEAD TO SEVERE INJURY OR DEATH

- Always Read the Plow Operator's Manual, the Winch Operator's Manual and all warning labels before operating.
- Always use extreme caution when drilling on any vehicle. Make sure that all fuel lines, brake lines, electrical wires, and other objects are not punctured or damaged when/if drilling on the vehicle. Thoroughly inspect the area to be drilled (on both sides of material) prior to drilling, and relocate any objects that may be damaged. Failure to inspect the area to be drilled may result in vehicle damage, electrical shock, fire or personal injury.
- Always wear safety glasses when installing this kit.
- Always use extreme caution when cutting and trimming during fitting.
- Always remove jewelry and wear eye protection.
- Always use appropriate and adequate care in lifting components into place.
- Always insure components will remain secure during installation and operation.
- Always tighten all nuts and bolts securely, per the installation instructions.
- Always operate the vehicle at a walking speed with the blade installed. Never exceed 5 mph (8 km/h), even with blade up.
- Always plow cautiously, impact with hidden or stationary object may cause the vehicle to stop suddenly or go out of control.
- Never operate the vehicle on slopes greater than 10 degrees with the plow installed.
- Never stand or ride on the plow.
- Always stay clear of moving parts and joints. Always keep others away when operating or adjusting plow.
- Always perform regular inspections and maintenance on the plow mechanism, fasteners, cable and related hardware.
- Always replace all worn or damaged parts before operating.
- Never operate this WARN product with damaged or missing parts.
- Always drive slowly over bumpy and rough terrain. Driving at speeds that cause the plow to bounce while in the up position can cause the winch to back-drive, causing the plow to work its way down. This may result in the plow impacting a stationary object and cause damage to the vehicle and operator injury or death.
- Always drive at speeds such that the plow does not bounce and be aware of the plow position while driving at all times.
- Never raise the top of the plow above the headlights of the ATV, as it may damage the vehicle and plow.

Read installation and operating instructions thoroughly.

WARN INDUSTRIES, INC. 12900 S.E. Capps Road,
Clackamas, OR USA 97015-8903, 1-503-722-1200, FAX: 1-503-722-3000
Customer Service: 1-800-543-9276
Dealer Locator Service: 1-800-910-1122
International Sales/Customer Service: 1-503-722-3008
International Fax: 1-503-722-3005

⚠ CAUTION

Moving Parts Entanglement Hazard

FAILURE TO OBSERVE THESE INSTRUCTIONS COULD LEAD TO MINOR OR MODERATE INJURY

- **Always take time to fully read and understand the installation and Operations Guide included with this product.**
- **Never operate this product if you are under 16 years of age.**
- **Never operate this product when under the influence of drugs, alcohol or medications.**

Read installation and operating instructions thoroughly.

NOTICE

Equipment Damage

- **Always refer to the Installation and Specification Guide, supplied in the winch kit, for all wiring schematics and specific details on how to wire this WARN product to your vehicle.**

Read installation and operating instructions thoroughly.

TABLE OF CONTENTS

Tools Required....page 2
Torque Specifications....page 2
Parts List....page 3
Installation....page 4
Operation.... page 5-6
Tips/Troubleshooting....page 7
Maintenance/Care....page 7

TOOLS REQUIRED

- Ratchet
- Sockets: 13mm,15mm, 16mm,17mm, 18mm,19mm
- Wrenches: 13mm, 15mm,16mm,17mm, 18mm, 19mm
- Torque Wrench

TORQUE SPECIFICATIONS

1/4	8 lb. ft. (10.8 N-m)
5/16	17 lb. ft. (12.5 N-m)
3/8	30 lb. ft. (40.7 N-m)
7/16	50 lb. ft. (67.8 N-m)
1/2	75 lb. ft. (101.7 N-m)

PARTS LIST

ITEM NO.	PN	DESCRIPTION	QTY
A1	90499	PLOW MOUNT	1
A2	90541	SUPPORT BRACKET	1
A3	111684	PLOW FLANGE	1
A4	82466	WINCH TERMINATION STRAP	1
B1	9213	1/2 SAE FLAT WASHER	8
B2	79712	3/8 PIN W/ SAFETY L CLIP	2
B3	2002	5/16 LOCK NUT	2
B4	22508	M8 -1.25 X 25MM HEX HEAD CAP SCREW	2
B5	69807	M10-1.5 LOCK NUT	2
B6	70117	M12-1.75 LOCK NUT	2
B7	22491	M8-1.25 LOCK NUT	2
B8	78957	M10-1.5 X 30MM CAP SCREW	2
B9	28514	M12-1.75 CAP SCREW	2
B10	61461	5/16-18 U-BOLT	1
B11	1402	5/16 LOCK WASHER	2
B12	1324	5/16 FLAT WASHER	8
B13	2079	5/16-18 NUT	2

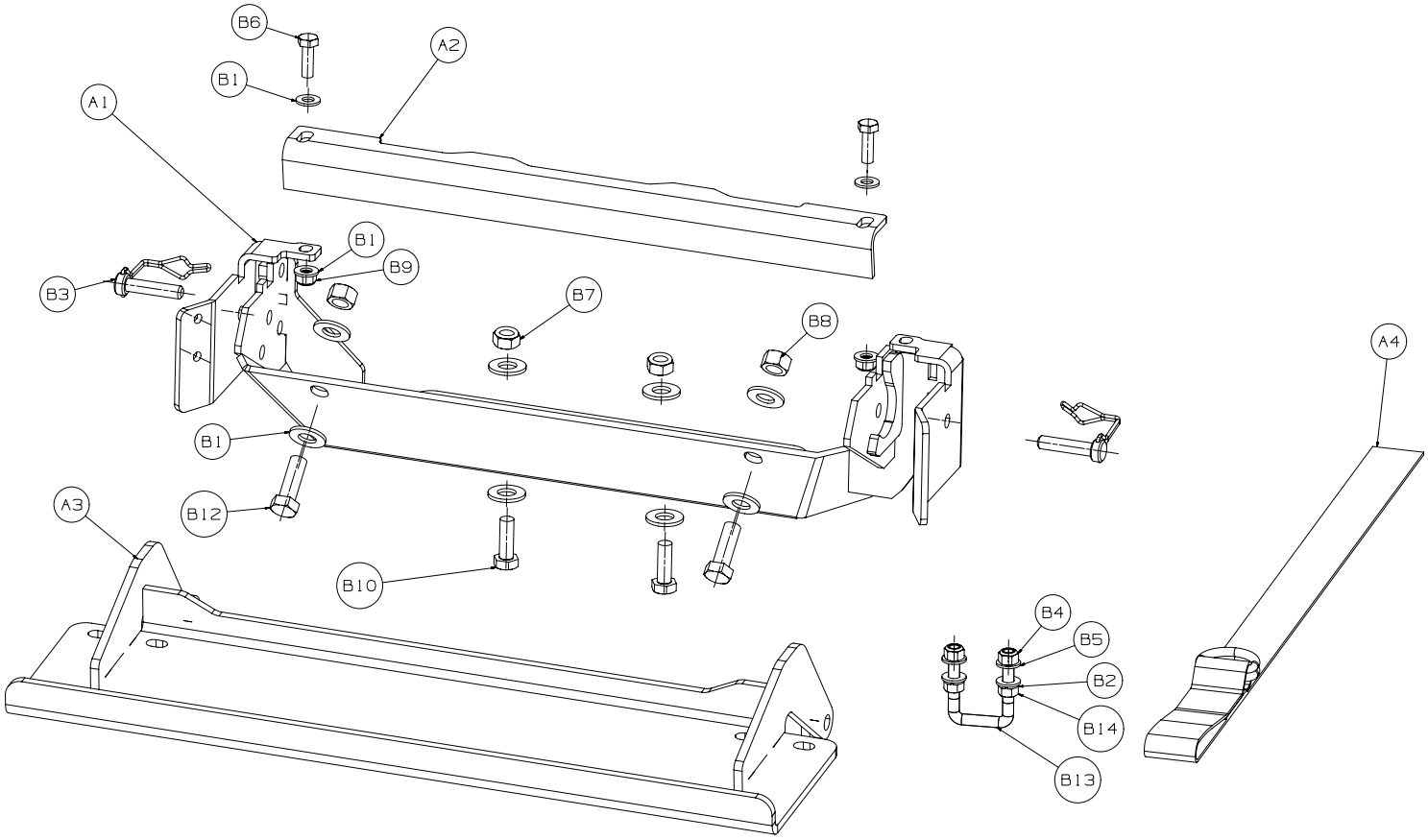

1. Position front plow mount against front and underside of vehicle's bumper as shown in Figure 1. Loosely secure with 12mm hardware using existing holes in factory bumper.

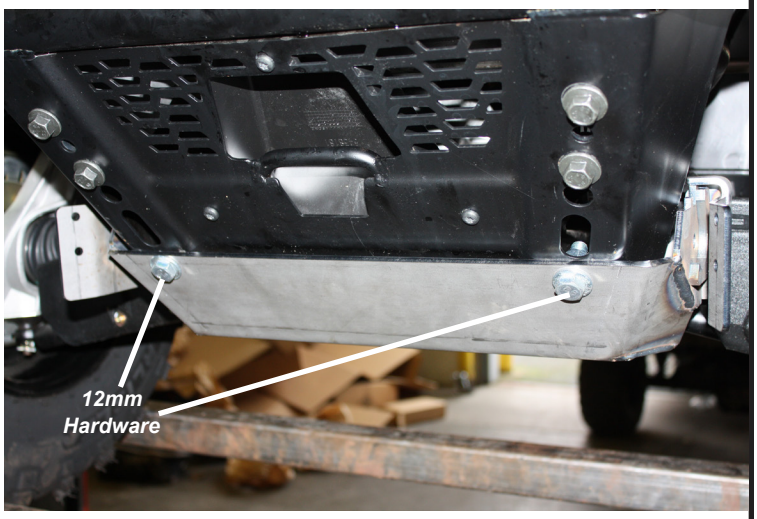

Figure 1

2. Secure mount to bottom skidplate of vehicle using 10mm hardware as shown in Figure 2. Do not tighten hardware at this time.

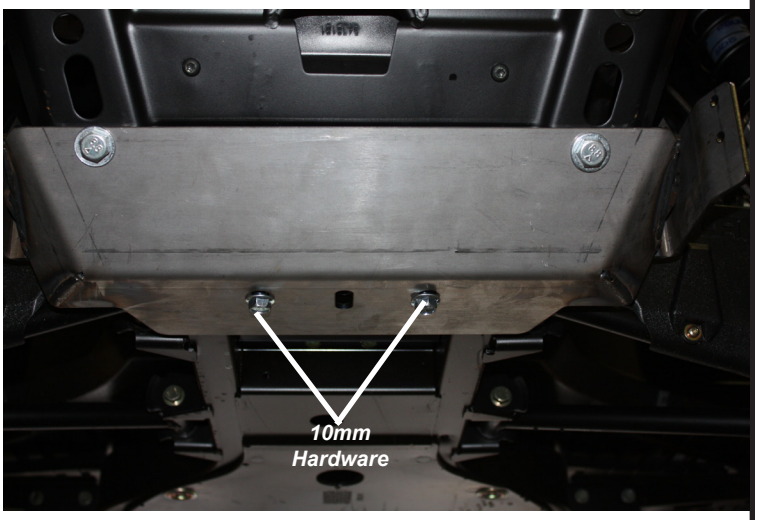

Figure 2

3. Slide support bracket through vehicle frame on top of mount in orientation shown in Figure 3. Secure bracket to mount using 8mm hardware. Once this bracket is in place all hardware can be tightened and torqued in place per specifications on page 2.

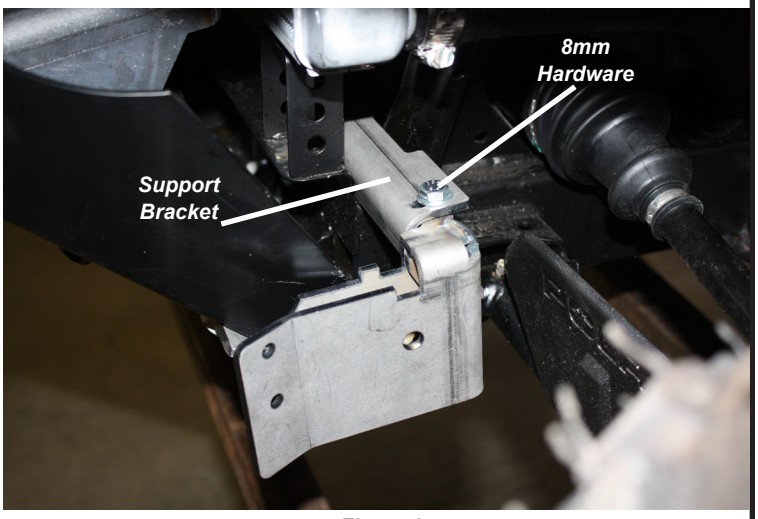

Figure 3

Operation

Attaching the plow to the vehicle:

1. Stage the plow assembly on level solid ground. See Plow operator guide “Installing the Plow” for more information on installing plow mount flange (A3). See Figure 4.

2. SLOWLY drive the vehicle up to the plow assembly with the vehicle as square to the plow as possible.

3. Turn off the vehicle and set the parking brake. Lift the plow mount flange end of the push tube assembly up to the plow mount on the vehicle. Insert the plow mount flange into the plow mount receiver. See Figure 5.

4. Double check that the plow is fully engaged with the alignment pucks on the plow mount flange. The alignment pucks should be fully seated into the plow mount cradle feature.

5. With both alignment pucks seated into the plow mount the retaining pins can be inserted. Once inserted the retaining clips on the pins can be clipped onto locking tab on plow mount, refer to Figure 6. See Plow operator guide “Installing the Plow” for more information.

6. With both retaining pins secure, pull out the line from the winch.

7. Pull the retaining pin on the plow assembly that is securing the pulley assembly. With the pulley assembly loose, place the pulley assembly over the winch line and reinstall the pulley assembly onto the push tube assembly securing the pulley assembly with the retaining pin. See “Double Line Rigging” in the Plow Lift section of the Plow Operators Guide.

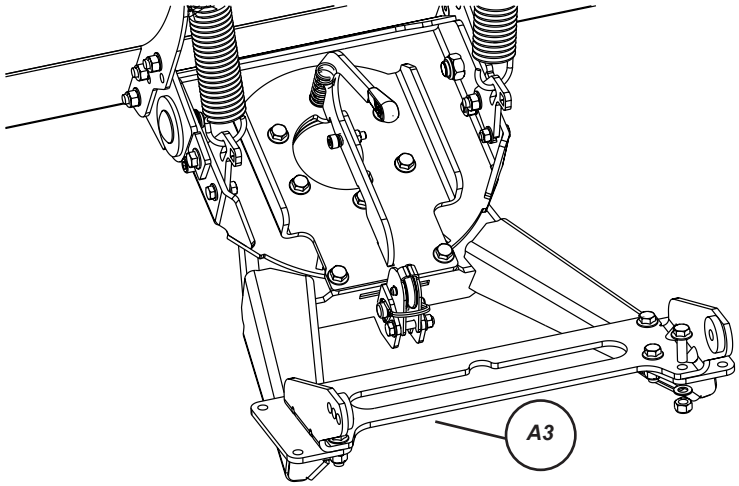

Figure 4 Install Plow Mount Flange

Figure 5

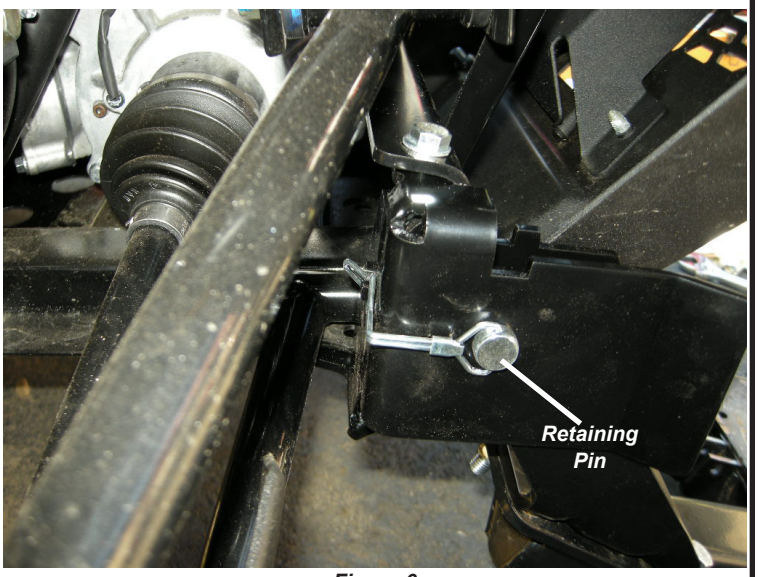

Figure 6

8. Connect the winch hook to the vehicle's front tow hook. See Figure 7. ***NOTE: On some newer models, because the hook mount location is lower than others, you must use the hook termination strap to attach hook. Mount the strap that best fits operation of the plow.***

9. Turn the ignition switch to ON, and operate the winch to lift and lower the plow. The plow is now ready for operation. Read the Plow Operators Guide before operating plow.

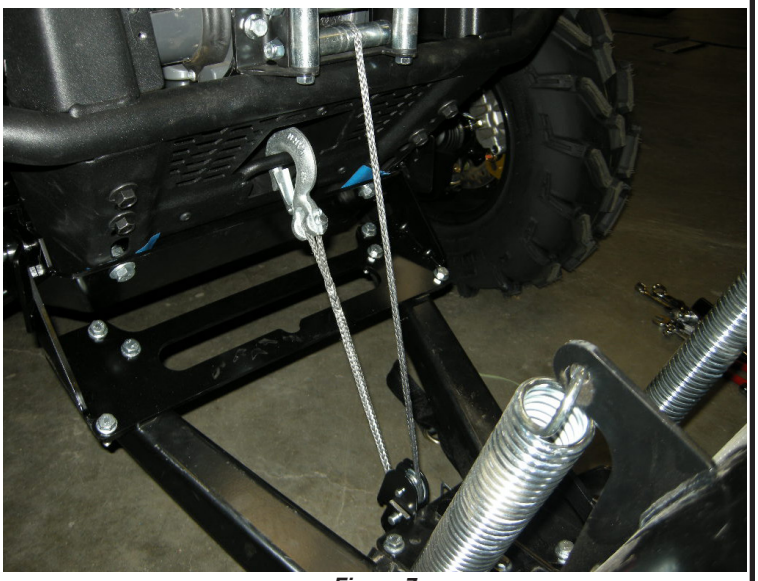

Figure 7

Helpful Hints

When removing the plow assembly from the plow mount, use a block under the base of the push tube assembly to hold up the assembly at the connection height. This will aid in the next connection on the plow assembly.

TROUBLE SHOOTING

- Avoid engaging or removing the plow from the vehicle on uneven, sloped, or soft ground. Doing so may misalign the plow mount and make it difficult for proper engagement and disengagement of the retaining pins
- If you are having trouble getting an alignment puck into the plow mount, it may need some simple adjustment. Ensure that the plow and vehicle are sitting level. Ensure that the plow base is in the center latched position
- After using the plow, the winch cable may begin to tangle around the drum. To fix this, pull off the plow assembly and free spool the cable out of the winch. Once the tangled cable is pulled off the drum, switch the winch out of free spool and winch the cable neatly back around the drum. Do NOT grab the cable or winch hook, instead use the winch hook strap provided with your winch and follow the guidelines as described in the winching guide.

MAINTENANCE / CARE

- Inspect all metal parts on the plow, plow mount, and related hardware prior to each use. Replace all parts that appear rusted or deformed.
- Inspect all nuts and bolts on the plow, plow mount, and related hardware prior to each use. Tighten all nuts and bolts that appear to be loose. Stripped, fractured, or bent bolts or nuts must be replaced.
- Check all cables prior to use. Replace cables that are worn or frayed.
- Check all moving and rotating parts. Remove debris that may inhibit the part from moving freely.
- See Warn Plow Operators Guide for more information.

⚠ WARNING

Failure to perform regular inspections and maintenance on the plow, plow mount, winch, and related hardware may result in vehicle damage and operator injury or death.

If you are having problems with your plow, please follow the steps below:

1. Reference the installation instructions for tips or notes.
2. Contact the dealer where you purchased the kit.
3. Call an authorized WARN Service Center from the warranty sheet included in the kit. Please have the following information available before calling; part number (listed on front of instructions), date of purchase, and make, model, and model year of ATV.
4. Contact WARN customer service at 1-800-543-9276 or www.warn.com. Again, please have the following information available before calling; part number (listed on front of instructions), date of purchase, and make, model, and model year of ATV.

Contact your nearest WARN Dealer to order. To find a dealer nearest you, please call the WARN Dealer locator line at 1 800-910-1122

CARELESS INSTALLATION AND OPERATION CAN RESULT IN SERIOUS INJURY OR EQUIPMENT DAMAGE. READ AND UNDERSTAND ALL SAFETY PRECAUTIONS AND OPERATING INSTRUCTIONS BEFORE INSTALLING AND OPERATING THIS PRODUCT.