INSTALLATION INSTRUCTIONS
PLOW MOUNT KIT
Part Number: 110758
Application: 2022 POLARIS RANGER 570 SP PLOW MOUNT

GENERAL SAFETY PRECAUTIONS

Your safety, and the safety of others, is very important. To help you make informed decisions about safety, we have provided installation and operating instructions and other information on labels and in this guide. This information alerts you to potential hazards that could hurt you or others. It is not possible to warn you about all potential hazards associated with this product, you must use your own good judgment.

CARELESS INSTALLATION AND OPERATION CAN RESULT IN SERIOUS INJURY OR EQUIPMENT DAMAGE. READ AND UNDERSTAND ALL SAFETY PRECAUTIONS AND OPERATING INSTRUCTIONS BEFORE INSTALLING AND OPERATING THIS PRODUCT.

This guide identifies potential hazards and has important safety messages that help you and others avoid personal injury or death. WARNING and CAUTION are signal words that identify the level of hazard. These signal words mean:

⚠**WARNING** signals a hazard that could cause serious injury or death, if you do not follow recommendations. ⚠**CAUTION** signals a hazard that may cause minor to moderate injury, if you do not follow recommendations.

This guide uses ***NOTICE*** to call attention to important mechanical information, and Note: to emphasize general information worthy of special attention.

⚠ WARNING

IMPACT AND MOVING PARTS ENTANGLEMENT HAZARD

Failure to observe these instructions could lead to severe injury or death

- **Always** Read the Plow Operator's Manual, the Winch Operator's Manual and all warning labels before operating.
- **Always** use extreme caution when drilling on any vehicle. Make sure that all fuel lines, brake lines, electrical wires, and other objects are not punctured or damaged when/if drilling on the vehicle. Thoroughly inspect the area to be drilled (on both sides of material) prior to drilling, and relocate any objects that may be damaged. Failure to inspect the area to be drilled may result in vehicle damage, electrical shock, fire or personal injury.
- **Always** wear safety glasses when installing this kit. A drilling operation will cause flying metal chips. Flying chips can cause eye injury.
- **Always** use extreme caution when cutting and trimming during fitting.
- **Always** remove jewelry and wear eye protection.
- **Never** lean over battery while making connections.
- **Never** route electrical cables:
  - Across any sharp edges.
  - Through or near moving parts.
  - Near parts that become hot.
- **Always** insulate and protect all exposed wiring and electrical terminals.
- **Always** install terminal boots as directed in installation instructions.
- **Always** use appropriate and adequate care in lifting components into place.
- **Always** insure components will remain secure during installation and operation.
- **Always** tighten all nuts and bolts securely, per the installation instructions.
- **Always** operate the vehicle at a walking speed with the blade installed. Never exceed 5 mph (8 km/h), even with blade up.
- **Always** plow cautiously, impact with hidden or stationary object may cause the vehicle to stop suddenly or go out of control.
- **Never** operate the vehicle on slopes greater than 10 degrees with the plow installed.
- **Never** stand or ride on the plow.
- **Always** stay clear of moving parts and joints. Always keep others away when operating or adjusting plow.
- **Always** perform regular inspections and maintenance on the plow mechanism, fasteners, cable and related hardware.
- **Always** replace all worn or damaged parts before operating.
- **Never** operate this WARN product with damaged or missing parts.
- **Always** drive slowly over bumpy and rough terrain. Driving at speeds that cause the plow to bounce while in the up position can cause the winch to back-drive, causing the plow to work its way down. This may result in the plow impacting a stationary object and cause damage to the vehicle and operator injury or death.
- **Always** drive at speeds such that the plow does not bounce and be aware of the plow position while driving at all times.
- **Always** be aware that the purpose of the j-bolt is to break the connection between the plow and the winch, to prevent serious damage to the ATV if the plow is raised too high. The plow blade will drop suddenly if the j-bolt breaks, so always be sure there are no bystanders when you raise and lower the plow.
- **Never** raise the top of the plow above the headlights of the ATV, as it may damage the vehicle and plow.
- **Always** replace a deformed or broken j-bolt with the spare j-bolt included in the kit.

Read installation and operating instructions thoroughly.

WARN INDUSTRIES, INC. 12900 S.E. Capps Road,
Clackamas, OR USA 97015-8903, 1-503-722-1200, FAX: 1-503-722-3000
Customer Service: 1-800-543-9276
Dealer Locator Service: 1-800-910-1122 International Fax: 1-503-722-3005

©2021 Warn Industries, Inc.WARN® and the WARN logo are trademarks of Warn Industries Inc.

⚠ CAUTION

MOVING PARTS ENTANGLEMENT HAZARD

Failure to observe these instructions could lead to minor or moderate injury

- **Always** take time to fully read and understand the installation and Operations Guide included with this product.
- **Never** operate this product if you are under 16 years of age.
- **Never** operate this product when under the influence of drugs, alcohol or medications.

Read installation and operating instructions thoroughly.

NOTICE

EQUIPMENT DAMAGE

- **Always** refer to the Installation and Specification Guide, supplied in the winch kit, for all wiring schematics and specific details on how to wire this WARN product to your vehicle.
- **Always** put the end of the actuator cable through the slot in the Termination Bracket. Terminating the cable through any other hole in the bracket will cause the bracket to not function properly and will drastically reduce the life of the actuator cable.
- **Never** overtighten u-bolt nuts. Overtightening may cause damage to vehicle frame.

Read installation and operating instructions thoroughly.

TOOLS REQUIRED

- Standard wrenches and sockets
- Metric wrenches and sockets

TORQUE SPECIFICATIONS

Please use the recommended torque specifications when assembling this product unless otherwise specified in the instructions.

NOTICE: Torque does not apply to u-bolts.

FASTENER SIZE	FASTENER TORQUE		FASTENER SIZE	FASTENER TORQUE	
	lb-ft	(N.m)		lb-ft	(N.m)
1/4"	8	(11)	M4	(2)	3
5/16"	17	(23)	M5	(4.5)	6
3/8"	30	(40)	M6	(7.5)	10
7/16”	48	(66)	M8	(18)	25
1/2"	74	(100)	M10	(37)	50
9/16”	106	(144)			
5/8"	148	(200)			
3/4”	269	(364)			

MAINTENANCE / CARE

- Inspect all metal parts on the plow, plow mount, and related hardware prior to each use. Replace all parts that appear rusted or deformed.
- Inspect all nuts and bolts on the plow, plow mount, and related hardware prior to each use. Tighten all nuts and bolts that appear to be loose. Stripped, fractured, or bent bolts or nuts must be replaced.
- Check all cables prior to use. Replace cables that are worn or frayed.
- Check all moving and rotating parts. Remove debris that may inhibit the part from moving freely.
- See Warn Plow Operators Guide for more information.

©2021 Warn Industries, Inc.WARN® and the WARN logo are trademarks of Warn Industries Inc.

PARTS LIST

ITEM	PART NUMBER	DESCRIPTION	QTY
A1	110632	PLOW MOUNT	1
A2	106640	PLOW FLANGE	1
A3	110715	SPACER PLATES	2

ITEM	PART NUMBER	DESCRIPTION	QTY
B1	109431	M10-1.25 FLANGE HEAD BOLT	2
B2	92506	M10-1.25 LOCK NUT	2
B3	78957	M10-1.5 X 30MM HEX BOLT	2
B4	87232	M10-1.5 LOCK NUT	2
B5	64110	M8-1.25 X 30MM CAPSCREW	4
B6	71588	M8-1.25 LOCK NUT	4
B7	35135	3/8 PIN W/SAFETY BAIL	2

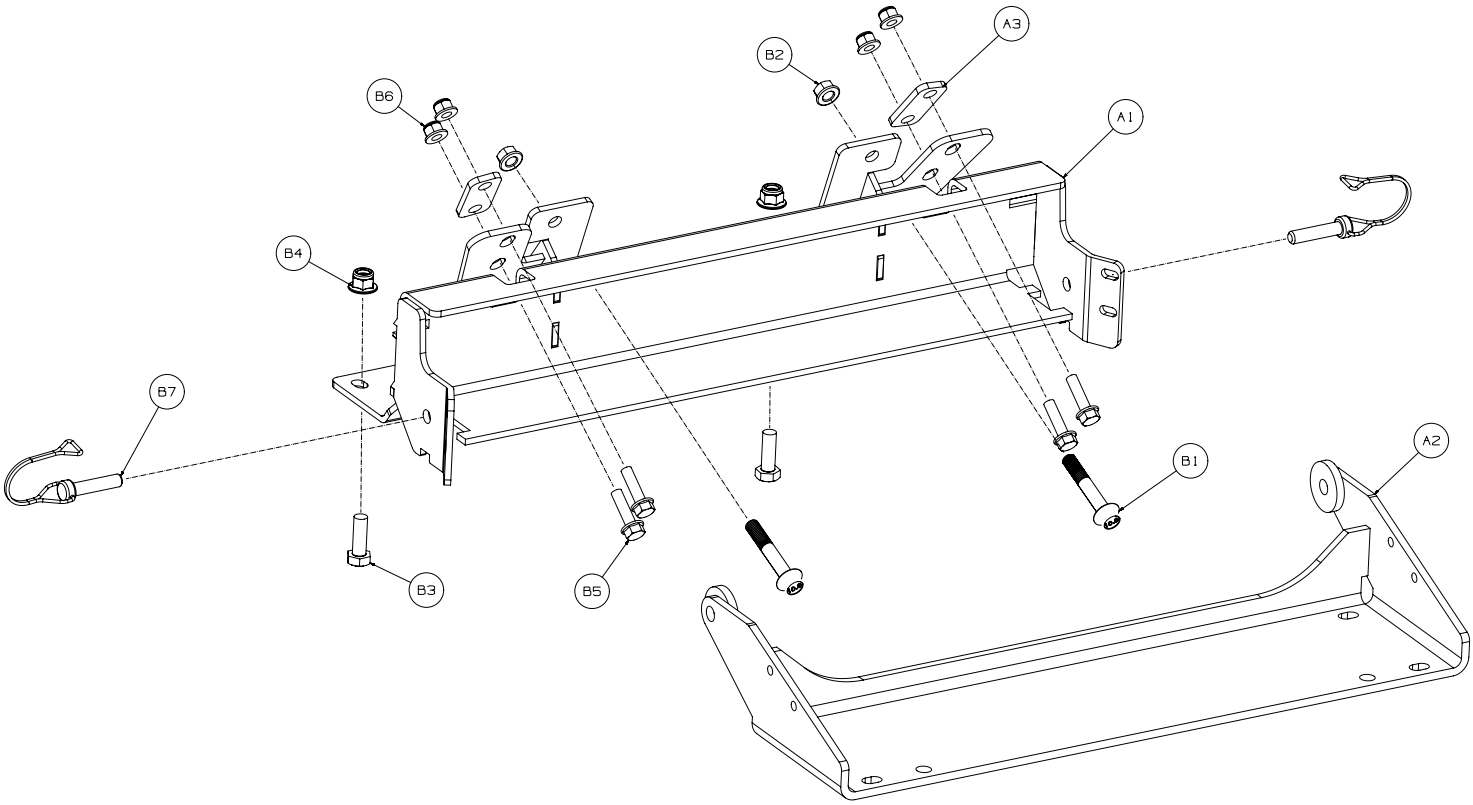

©2021 Warn Industries, Inc.WARN® and the WARN logo are trademarks of Warn Industries Inc.

TIP: Lifting the front end of the vehicle will aid in installation.

1. Remove the two bolts securing the grab bar to the front of the bumper. **NOTE: You will not be reusing the hardware. You will use these two holes plus the two holes underneath the front bumper for mounting.**

2. Hold the plow mount in place on the vehicle.

3. From underneath the bumper, install the two M10 x 60mm long bolts (B1) and locking flange nuts (B2) to the two outer holes on the premium bumper ***OR*** the two inner holes on the base model bumper. Do not completely tighten ***NOTE: Image shows premium bumper installation (bolts in outer mounting holes).***

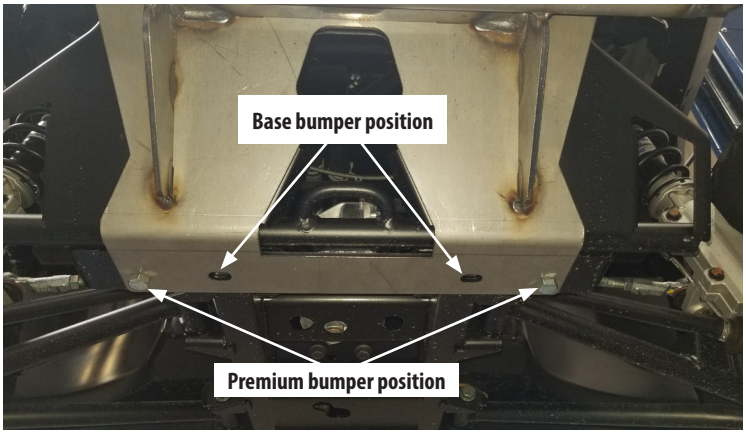

NOTE: Your mount will now hang in place until the top two bolts are secured.

4. Push the mount into position, aligning the upper holes.

5. Install upper plow mount hardware:

   For premium bumper:

   Install the two M10 x 30mm long bolts (B3) and locking flange nuts (B4).

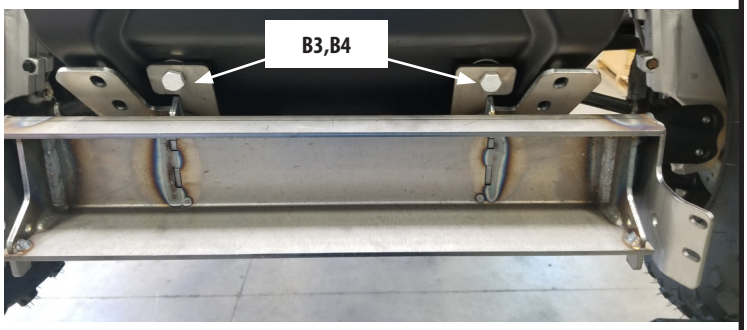

   For base bumper:

   Install the four M8-1.25 X 30mm bolts (B5), two spacers (A3) and four locking flange nuts (B6). ***NOTE: The spacers go between the mount and the bumper.***

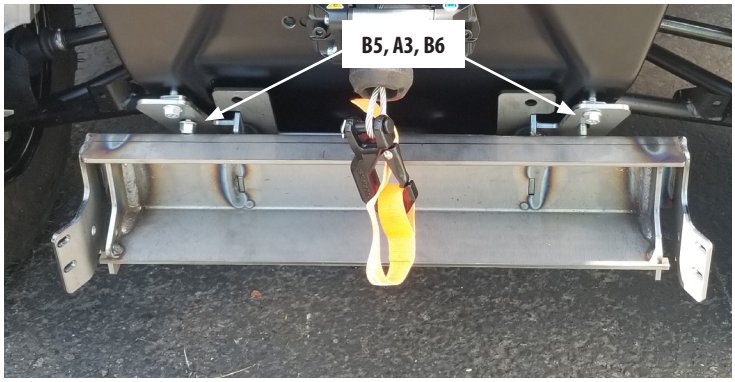

6. Starting with lower hardware and moving your way up - tighten **ALL** hardware now.

7. Attach your plow flange to push tubes per your push tube installation kit instructions.

8. Attach your push tube assembly to plow mount using the 3/8 pins w/safety bail.

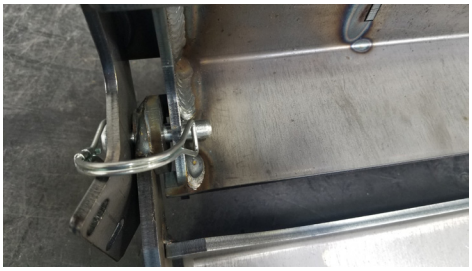

©2021 Warn Industries, Inc.WARN® and the WARN logo are trademarks of Warn Industries Inc.