INSTALLATION INSTRUCTIONS
PLOW MOUNT KIT
Part Number: 107820
Application: 2021 Polaris 570 Sportsman

GENERAL SAFETY PRECAUTIONS

Your safety, and the safety of others, is very important. To help you make informed decisions about safety, we have provided installation and operating instructions and other information on labels and in this guide. This information alerts you to potential hazards that could hurt you or others. It is not possible to warn you about all potential hazards associated with this product, you must use your own good judgment.

CARELESS INSTALLATION AND OPERATION CAN RESULT IN SERIOUS INJURY OR EQUIPMENT DAMAGE. READ AND UNDERSTAND ALL SAFETY PRECAUTIONS AND OPERATING INSTRUCTIONS BEFORE INSTALLING AND OPERATING THIS PRODUCT.

This guide identifies potential hazards and has important safety messages that help you and others avoid personal injury or death. WARNING and CAUTION are signal words that identify the level of hazard. These signal words mean:

⚠WARNING signals a hazard that could cause serious injury or death, if you do not follow recommendations. ⚠CAUTION signals a hazard that may cause minor to moderate injury, if you do not follow recommendations.

This guide uses NOTICE to call attention to important mechanical information, and Note: to emphasize general information worthy of special attention.

⚠ WARNING

IMPACT AND MOVING PARTS ENTANGLEMENT HAZARD

Failure to observe these instructions could lead to severe injury or death

- **Always** Read the Plow Operator's Manual, the Winch Operator's Manual and all warning labels before operating.
- **Always** use extreme caution when drilling on any vehicle. Make sure that all fuel lines, brake lines, electrical wires, and other objects are not punctured or damaged when/if drilling on the vehicle. Thoroughly inspect the area to be drilled (on both sides of material) prior to drilling, and relocate any objects that may be damaged. Failure to inspect the area to be drilled may result in vehicle damage, electrical shock, fire or personal injury.
- **Always** wear safety glasses when installing this kit. A drilling operation will cause flying metal chips. Flying chips can cause eye injury.
- **Always** use extreme caution when cutting and trimming during fitting.
- **Always** remove jewelry and wear eye protection.
- **Never** lean over battery while making connections.
- **Never** route electrical cables:
  - o Across any sharp edges.
  - o Through or near moving parts.
  - o Near parts that become hot.
- **Always** insulate and protect all exposed wiring and electrical terminals.
- **Always** install terminal boots as directed in installation instructions.
- **Always** use appropriate and adequate care in lifting components into place.
- **Always** insure components will remain secure during installation and operation.
- **Always** tighten all nuts and bolts securely, per the installation instructions.
- **Always** operate the vehicle at a walking speed with the blade installed. Never exceed 5 mph (8 km/h), even with blade up.
- **Always** plow cautiously, impact with hidden or stationary object may cause the vehicle to stop suddenly or go out of control.
- **Never** operate the vehicle on slopes greater than 10 degrees with the plow installed.
- **Never** stand or ride on the plow.
- **Always** stay clear of moving parts and joints. Always keep others away when operating or adjusting plow.
- **Always** perform regular inspections and maintenance on the plow mechanism, fasteners, cable and related hardware.
- **Always** replace all worn or damaged parts before operating.
- **Never** operate this WARN product with damaged or missing parts.
- **Always** drive slowly over bumpy and rough terrain. Driving at speeds that cause the plow to bounce while in the up position can cause the winch to back-drive, causing the plow to work its way down. This may result in the plow impacting a stationary object and cause damage to the vehicle and operator injury or death.
- **Always** drive at speeds such that the plow does not bounce and be aware of the plow position while driving at all times.
- **Always** be aware that the purpose of the j-bolt is to break the connection between the plow and the winch, to prevent serious damage to the ATV if the plow is raised too high. The plow blade will drop suddenly if the j-bolt breaks, so always be sure there are no bystanders when you raise and lower the plow.
- **Never** raise the top of the plow above the headlights of the ATV, as it may damage the vehicle and plow.
- **Always** replace a deformed or broken j-bolt with the spare j-bolt included in the kit.

Read installation and operating instructions thoroughly.

WARN INDUSTRIES, INC. 12900 S.E. Capps Road,
Clackamas, OR USA 97015-8903, 1-503-722-1200, FAX: 1-503-722-3000
Customer Service: 1-800-543-9276
Dealer Locator Service: 1-800-910-1122
International Fax: 1-503-722-3005

©2021 Warn Industries, Inc.WARN® and the WARN logo are trademarks of Warn Industries Inc.

⚠ CAUTION

MOVING PARTS ENTANGLEMENT HAZARD

Failure to observe these instructions could lead to minor or moderate injury

- **Always** take time to fully read and understand the installation and Operations Guide included with this product.
- **Never** operate this product if you are under 16 years of age.
- **Never** operate this product when under the influence of drugs, alcohol or medications.

Read installation and operating instructions thoroughly.

NOTICE

EQUIPMENT DAMAGE

- **Always** refer to the Installation and Specification Guide, supplied in the winch kit, for all wiring schematics and specific details on how to wire this WARN product to your vehicle.
- **Always** put the end of the actuator cable through the slot in the Termination Bracket. Terminating the cable through any other hole in the bracket will cause the bracket to not function properly and will drastically reduce the life of the actuator cable.

Read installation and operating instructions thoroughly.

NOTES

BEFORE YOU BEGIN

This instruction is written as if you already have a winch installed. If you do not have your winch installed, please do so prior to this instruction.

TABLE OF CONTENTS

Tools Required ..... page 2
Parts List ..... page 3
Torque Specifications ..... page 3
Installation ..... page 4-5
Maintenance/Care ..... page 6

TOOLS REQUIRED

- Standard wrenches
- Standard sockets

©2021 Warn Industries, Inc.WARN® and the WARN logo are trademarks of Warn Industries Inc.

PARTS LIST

ITEM	PN	DESCRIPTION	QTY	ITEM	PN	DESCRIPTION	QTY
A1	107770	PLOW MOUNT	1	B1	65970	M8 FLANGE HEAD BOLT 25MM	4
A2	107767	RH PLOW SUPPORT BRACKET	1	B2	71588	M8 FLANGE LOCK NUT	8
A3	107768	LH PLOW SUPPORT BRACKET	1	B3	64110	M8 FLANGE HEAD BOLT 30MM	4
A4	79225	RH PLOW FLANGE TABS	1	B4	35136	3/8 PIN W/ SAFETY RETAINER	2
A5	79226	LH PLOW FLANGE TABS	1				

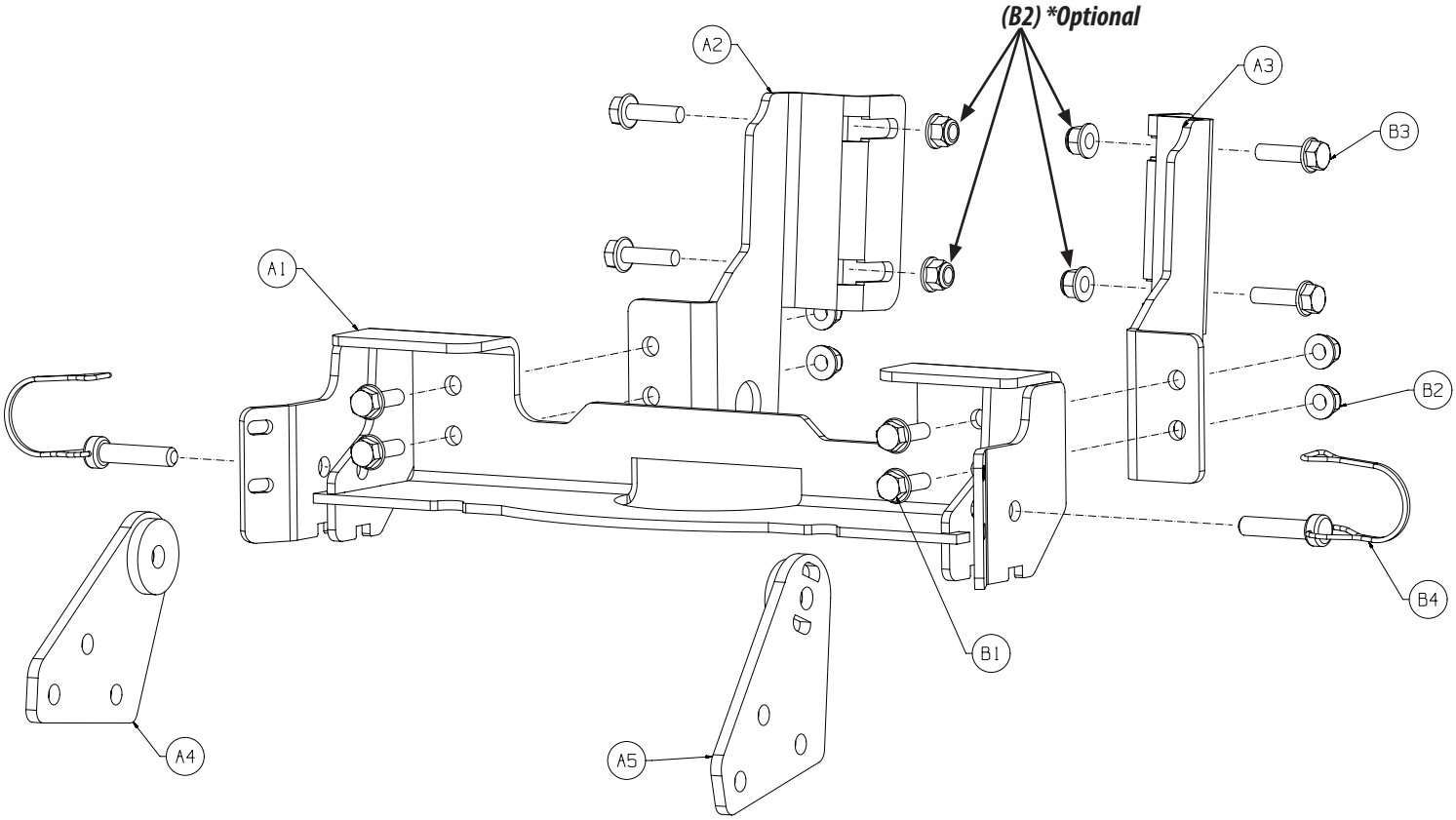

TORQUE SPECIFICATIONS

Please use the recommended torque specifications when assembling this product unless otherwise specified in the instructions.

FASTENER SIZE	FASTENER TORQUE	
	lb-ft	(N.m)
1/4"	8	(11)
5/16"	17	(23)
3/8"	30	(40)
7/16"	48	(66)
1/2"	74	(100)
9/16"	106	(144)
5/8"	148	(200)
3/4"	269	(364)

FASTENER SIZE	FASTENER TORQUE	
	lb-ft	(N.m)
M4	(2)	3
M5	(4.5)	6
M6	(7.5)	10
M8	(18)	25
M10	(37)	50

©2021 Warn Industries, Inc.WARN® and the WARN logo are trademarks of Warn Industries Inc.

1. Starting with one side of the vehicle, remove the two winch mount bolts. *You will not be reusing this hardware. NOTE: Do not continue to next side until first plow bracket is secured.*

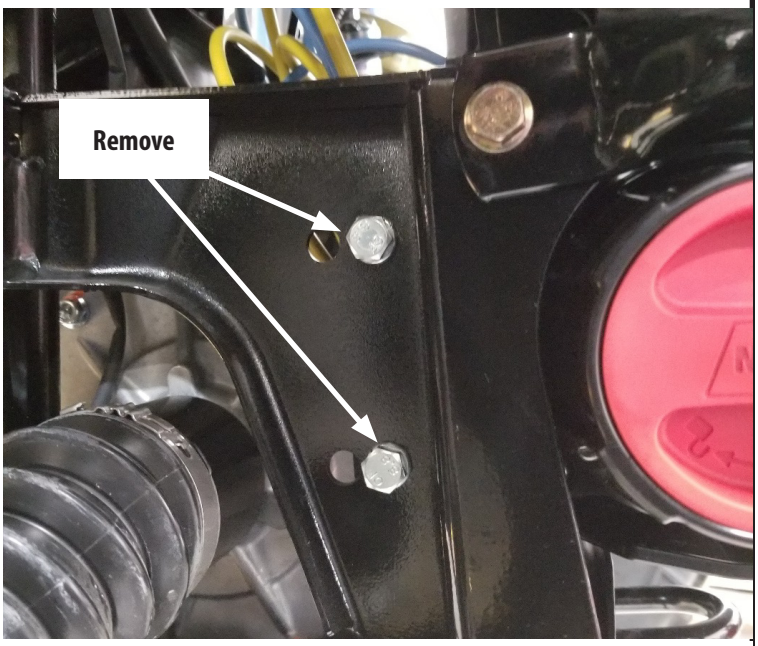

Figure 1

2. Position a plow support bracket (A2) over vehicle's metal tube and line up the slots in bracket to the winch mount holes.

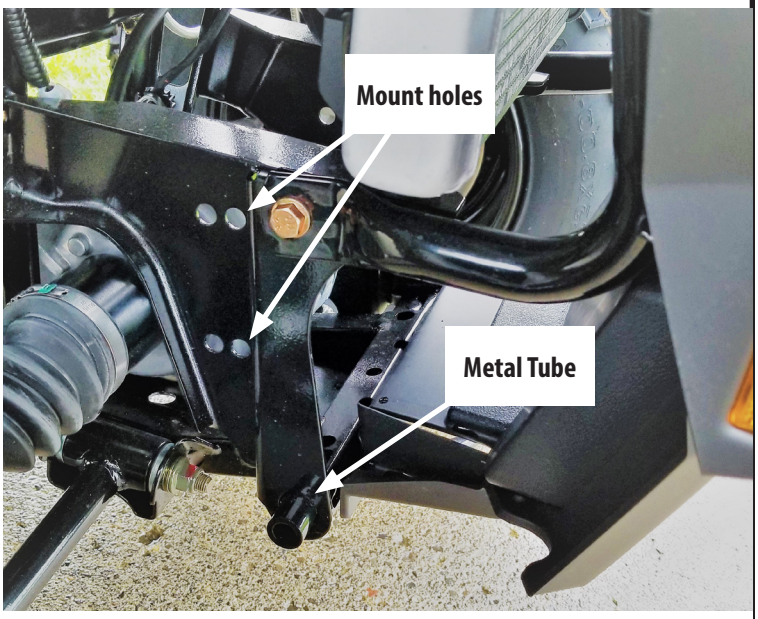

Figure 2

3. Secure support bracket by installing two of the M8 x 30mm supplied bolts (B3) through bracket, vehicle frame, and into winch mount (*where the winch mount bolts were previously*). Do not completely tighten yet to allow for adjustment. ***NOTE: If your winch mount does not have weldnuts, you will need to secure bracket with the supplied M8 locknuts (B2).***

4. Repeat steps for other side now.

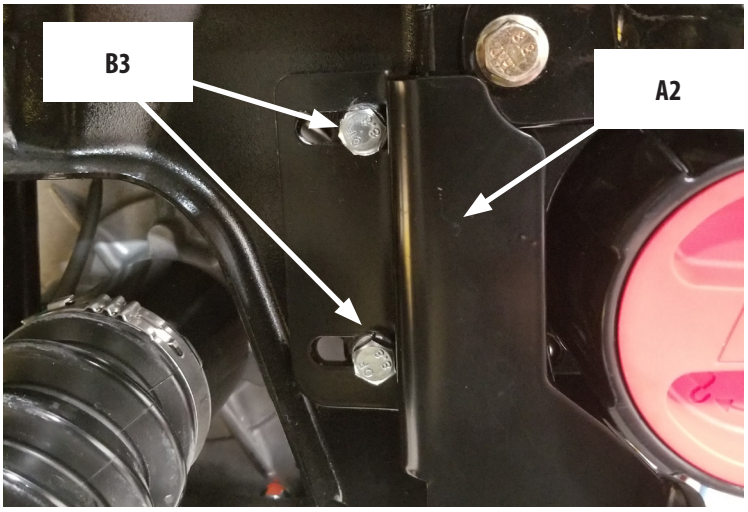

Figure 3

©2021 Warn Industries, Inc.WARN® and the WARN logo are trademarks of Warn Industries Inc.

5. From the front of the vehicle, center and level support brackets as shown.

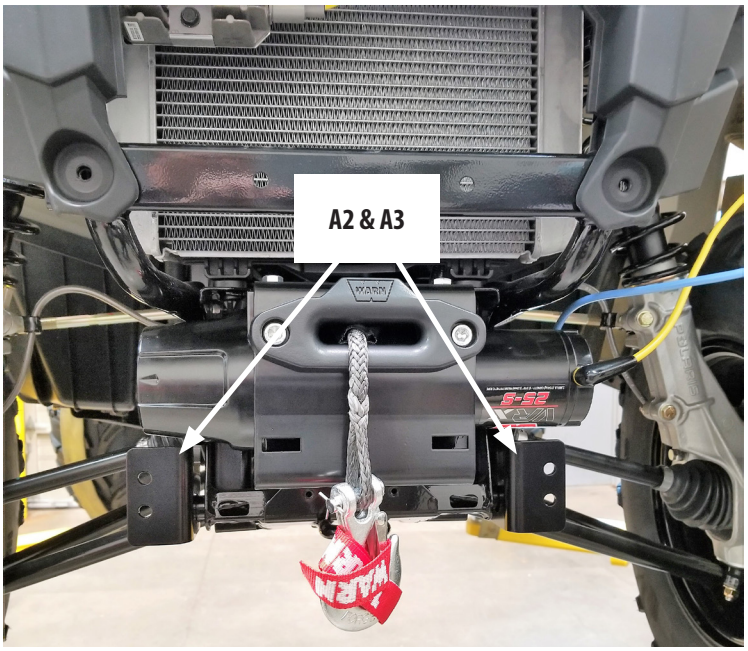

Figure 4

6. Align plow mount (A1) to the holes in the support brackets and attach using the four M8x25mm bolts (B1) and locknuts (B2).

7. Tighten **ALL** hardware at this time. Start with the support brackets, while pushing upward and in toward the vehicle as you tighten and lastly tighten the plow mount hardware.

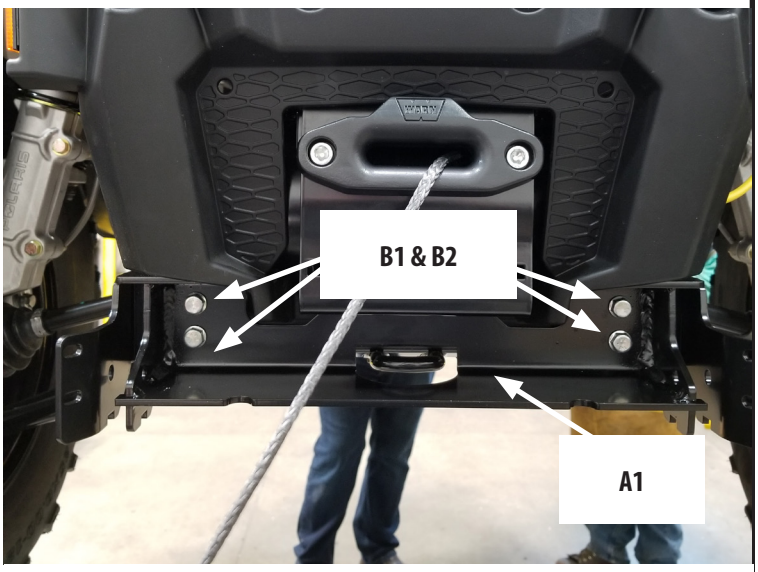

Figure 5

8. Install plow flange tabs (A4 & A5) to plow mount using the included retaining pins (B4).

9. Complete your plow installation per your plow system installation instructions.

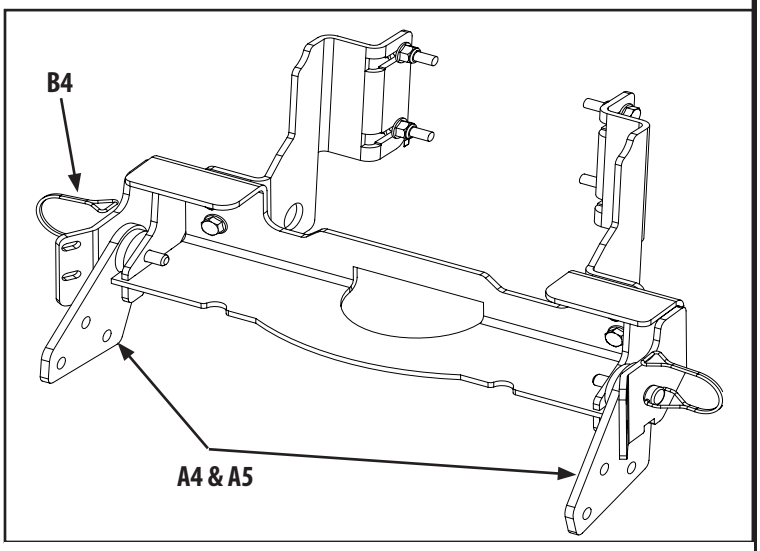

Figure 6

©2021 Warn Industries, Inc.WARN® and the WARN logo are trademarks of Warn Industries Inc.

MAINTENANCE / CARE

1. Inspect all parts on the winch, winch mount and related hardware prior to each use. Replace all hardware that appears rusted or deformed.

2. Inspect all nuts and bolts on the winch, winch mount and related hardware prior to each use. Tighten all nuts that appear to be loose. Stripped, fractured, or bent bolts or nuts need to be replaced.

3. Check all cables prior to use. Replace cables that look worn or frayed.

4. Check all moving or rotating parts. Remove debris that may inhibit the part from moving freely.

CARELESS INSTALLATION AND OPERATION CAN RESULT IN SERIOUS INJURY OR EQUIPMENT DAMAGE. READ AND UNDERSTAND ALL SAFETY PRECAUTIONS AND OPERATING INSTRUCTIONS BEFORE INSTALLING AND OPERATING THIS PRODUCT.

©2021 Warn Industries, Inc.WARN® and the WARN logo are trademarks of Warn Industries Inc.