INSTALLATION INSTRUCTIONS
Winch Mount Bumper
Part Number: 106822
Application: 2020 Polaris General

GENERAL SAFETY PRECAUTIONS

Your safety, and the safety of others, is very important. To help you make informed decisions about safety, we have provided installation and operating instructions and other information on labels and in this guide. This information alerts you to potential hazards that could hurt you or others. It is not possible to warn you about all potential hazards associated with this product, you must use your own good judgment.

CARELESS INSTALLATION AND OPERATION CAN RESULT IN SERIOUS INJURY OR EQUIPMENT DAMAGE. READ AND UNDERSTAND ALL SAFETY PRECAUTIONS AND OPERATING INSTRUCTIONS BEFORE INSTALLING AND OPERATING THIS PRODUCT.

This guide identifies potential hazards and has important safety messages that help you and others avoid personal injury or death. WARNING and CAUTION are signal words that identify the level of hazard. These signal words mean:

⚠**WARNING** signals a hazard that could cause serious injury or death, if you do not follow recommendations. ⚠**CAUTION** signals a hazard that may cause minor to moderate injury, if you do not follow recommendations.

This guide uses ***NOTICE*** to call attention to important mechanical information, and Note: to emphasize general information worthy of special attention.

⚠ WARNING

IMPACT AND MOVING PARTS ENTANGLEMENT HAZARD

Failure to observe these instructions could lead to severe injury or death

- **Always** Know Your Winch. Take time to fully read the Instructions and/or Operations Guide, and/or Basic Guide to Winching Techniques, in order to understand your winch and its operations.
- **Never** work under vehicle before properly securing vehicle.
- **Always** use appropriate and adequate care in lifting components into place.
- **Never** work under vehicle before properly securing vehicle.
- **Always** use appropriate and adequate care in lifting components into place.
- **Never** use a jack to support the vehicle.
- **Always** use jack stands in pairs to support the vehicle.
- **Always** use jacks or jack stands only on a hard, stable, and level surface.
- **Never** exceed the rated capacity of a jack or jack stands.
- **Always** verify that the parking brake is set, the transmission is in park (automatic) or reverse (manual) and the rear wheels are blocked before working on vehicle.
- **Never** work under vehicle before properly securing vehicle.
- **Always** use appropriate and adequate care in lifting components into place.
- **Always** insure components will remain secure during installation and operation.
- **Always** tighten all nuts and bolts securely, per the installation and operation.
- **Always** perform regular inspections and maintenance on the winch, winch mount and related hardware.
- **Always** replace all worn or damaged parts before operating.
- **Never** operate this WARN product with damaged or missing parts.
- **Always** use extreme caution when drilling on any vehicle. Make sure that all fuel lines, brake lines, electrical wires, and other objects are not punctured or damaged when / if drilling on the vehicle. Thoroughly inspect the area to be drilled (on both sides of material) prior to drilling, and relocate any objects that may be damaged. Failure to inspect the area to be drilled may result in vehicle damage, electrical shock, fire or personal injury.
- **Always** use extreme caution when cutting and trimming during fitting.
- **Always** wear safety glasses when installing this kit. A drilling operation will cause flying metal chips. Flying chips can cause eye injury.
- **Always** remove jewelry and wear eye protection.
- **Never** lean over battery while making connections.
- **Never** route electrical cables across any sharp edge, through or near moving parts, near parts that become hot.

Read installation and operating instructions thoroughly.

WARN INDUSTRIES, INC. 12900 S.E. Capps Road,
Clackamas, OR USA 97015-8903, 1-503-722-1200, FAX: 1-503-722-3000
Customer Service: 1-800-543-9276
Dealer Locator Service: 1-800-910-1122
International Sales/Customer Service: 1-503-722-3008
International Fax: 1-503-722-3005

©2019 Warn Industries, Inc. WARN® and the WARN logo are trademarks of Warn Industries Inc.

⚠ CAUTION

MOVING PARTS ENTANGLEMENT HAZARD

Failure to observe these instructions could lead to minor or moderate injury

- Part edges may be sharp!
- Always use proper posture / lifting technique or get lifting assistance while handling and installing product.

Read installation and operating instructions thoroughly.

NOTICE

EQUIPMENT DAMAGE

- **Never** tow vehicle by attaching a tow bar to the eyelets on the bumper.
- Do not attach tow bars directly to the bumper. Damage to bumper may occur. WARN bumpers are not designed to be used for flat towing. Consult with the manufacturer of your tow bar system for the proper vehicle tow bar brackets..

Read installation and operating instructions thoroughly.

NOTES

TABLE OF CONTENTS

Tools Required..... page 2
Parts List..... page 3
Torque Specifications..... page 3
Installation .....page 4-8
Maintenance/Care..... page 9

TOOLS REQUIRED

- Standard wrenches and sockets
- Metric wrenches and sockets
- Pneumatic reciprocating saw

©2019 Warn Industries, Inc. WARN® and the WARN logo are trademarks of Warn Industries Inc.

PARTS LIST

Item	PN	Description	Qty.	Item	PN	Description	Qty.
A1	106824	UPPER BUMPER MOUNT	1	B1	83474	M8 LOCK WASHER	4
A2	94890	SUPPORT MOUNTING BRACKET	1	B2	93104	M8 X 25MM HEX HEAD BOLT	4
A3	106826	LOWER BUMPER MOUNT	1	B3	71588	M8 LOCK NUT	8
A4	106830	BUMPER SHELL	1	B4	65970	M8 X 25MM FLANGE HD BOLT	8
A5	28885	FAIRLEAD PLATE	1	B5	87232	M10 LOCK NUT	4
				B6	69954	M10 X 35MM HEX HEAD FLANGE BOLT	4
				B7	79465	M12 FLANGE LOCK NUT	4
				B8	79464	M12 HEX HEAD FLANGE BOLT	4
				B9	102248	PLASTIC PLUG	4

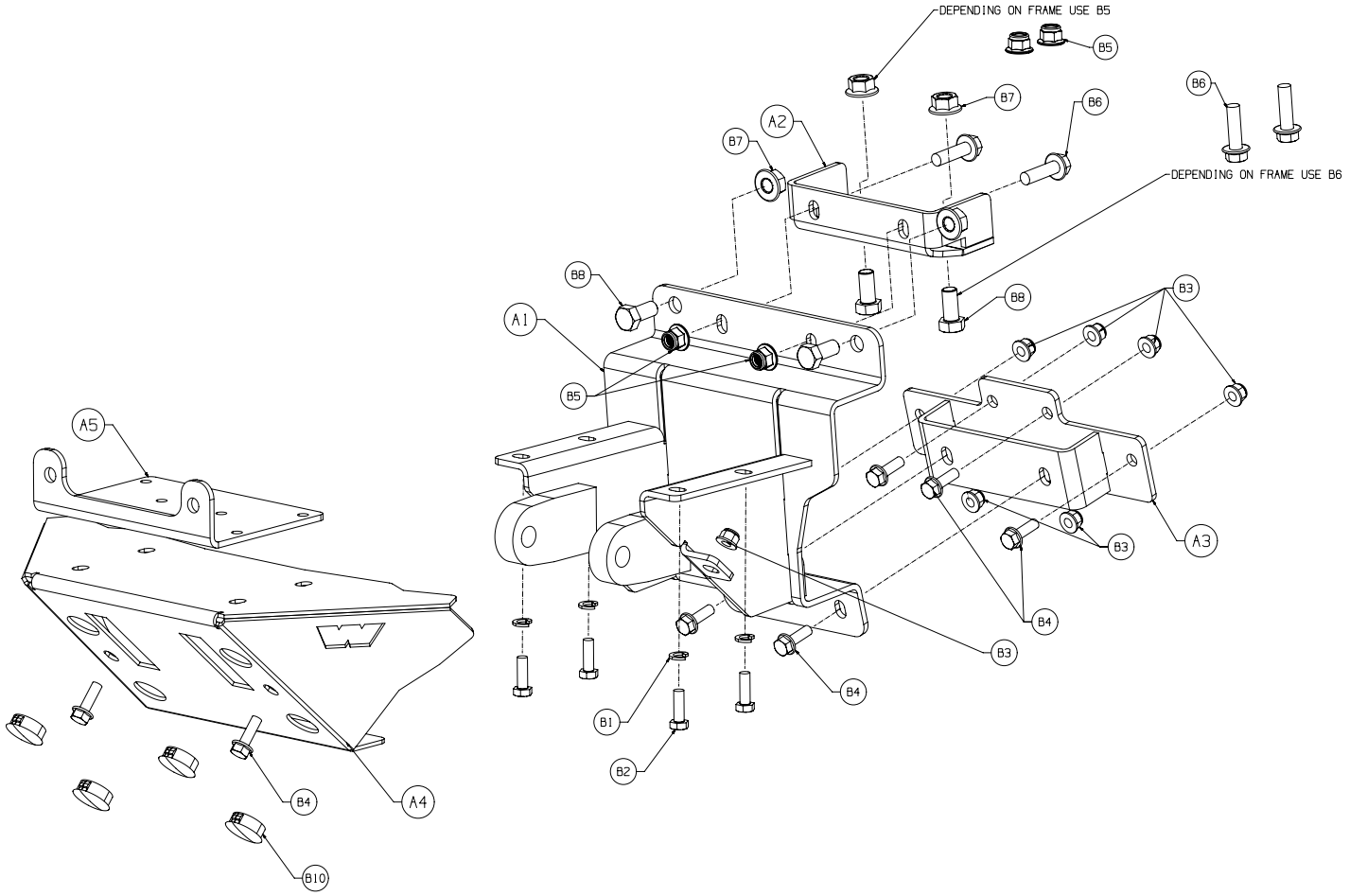

TORQUE SPECIFICATIONS

Please use the recommended torque specifications when assembling this product unless otherwise specified in the instructions.

FASTENER SIZE	FASTENER TORQUE		FASTENER SIZE	FASTENER TORQUE	
	lb-ft	(N.m)		lb-ft	(N.m)
1/4"	8	(11)	M4	(2)	3
5/16"	17	(23)	M5	(4.5)	6
3/8"	30	(40)	M6	(7.5)	10
7/16”	48	(66)	M8	(18)	25
1/2"	74	(100)	M10	(37)	50
9/16”	106	(144)			
5/8"	148	(200)			
3/4”	269	(364)			

B4

©2019 Warn Industries, Inc. WARN® and the WARN logo are trademarks of Warn Industries Inc.

1. Remove the front bumper.
   a. First pull the plastic tube caps from the front of the bumper.

   NOTE: If you are changing from a Polaris winch to a WARN winch bumper mount you will also need to remove the hook and fairlead at this time.

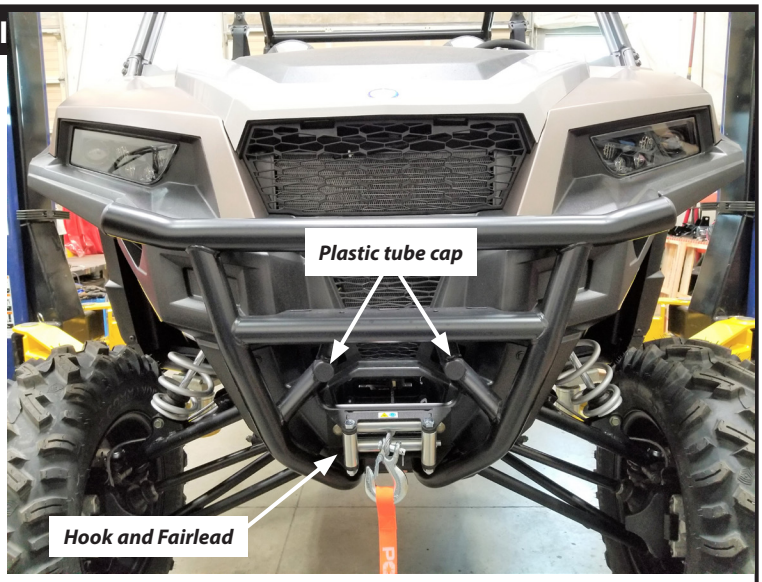

Figure 1

   b. Remove the upper grille by depressing the two grille tabs.

   c. Remove the two bolts and nuts that hold the tube bumper to the vehicle. *TIP: Place a 15mm wrench behind the grill to hold on to the nuts while using a ratchet and 15mm socket on the front side.*

   d. Remove the lower two bumper bolts and nuts using a 15mm socket.

Figure 2

2. After removing the bumper, remove the nut plate. Located behind the two lower bumper bolts by lifting up and sliding off the metal flange.

Figure 3

©2019 Warn Industries, Inc. WARN® and the WARN logo are trademarks of Warn Industries Inc.

3. Remove the four push pull pin fasteners and remove the front center plastic. Save hardware for later step.

Figure 4

4. Install support mounting bracket (A2).

   TIP: For this step, it may be more clear to refer to the exploded view on page 3 for part A2.

   a. Position the bracket (A2) behind the sheet metal flange just behind the plastic grill.

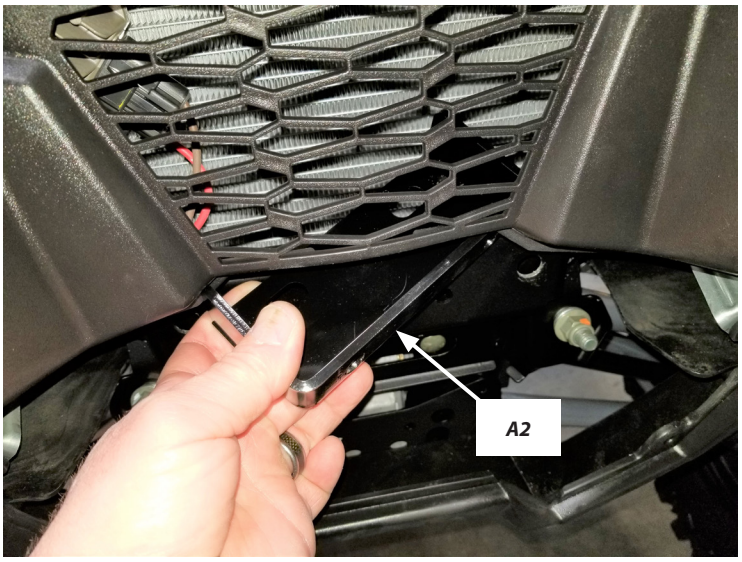

Figure 5

   b. Install two flange head 10mm bolts (B6) through the bracket and sheet metal flange.

   c. ***NOTE: The mounting holes vary in size. The size of the mounting hole determines the size of the bolt for this step.***

      Install the two flange head bolt (B8 OR B6) up through the frame and through the bracket.

   d. Secure with two flange head nuts (B5) or (B7) depending on which bolt you used.

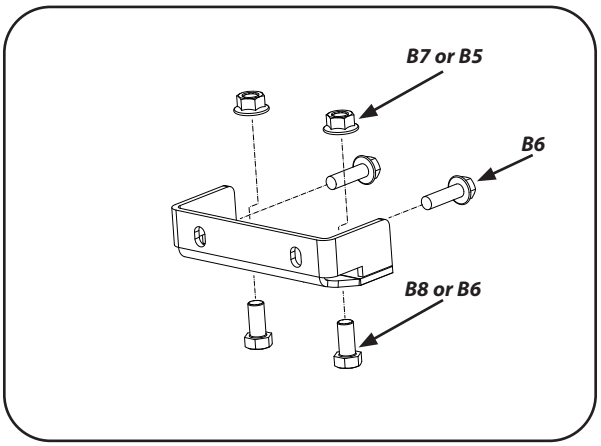

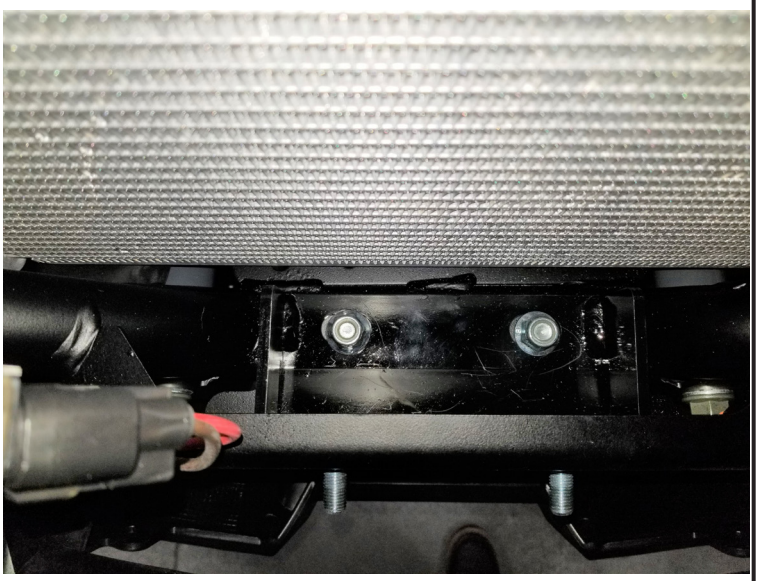

Figure 6

©2019 Warn Industries, Inc. WARN® and the WARN logo are trademarks of Warn Industries Inc.

5. Attach the lower bumper bracket (A3) to the vehicle using the M8 flange bolts (B4) and lock nuts (B3).

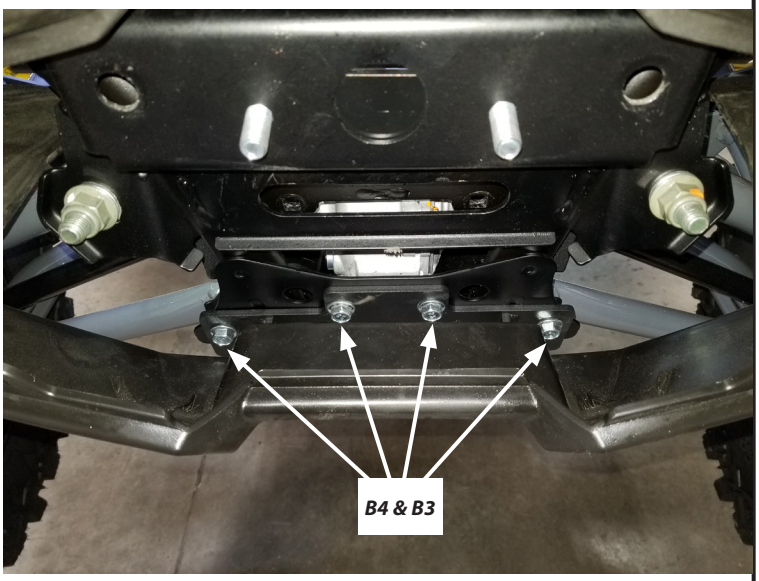

Figure 7

6. Attach the upper bumper mount by placing over the previously installed M10 bolts.
7. Thread the supplied flange lock nuts (B5) on but do not tighten yet.

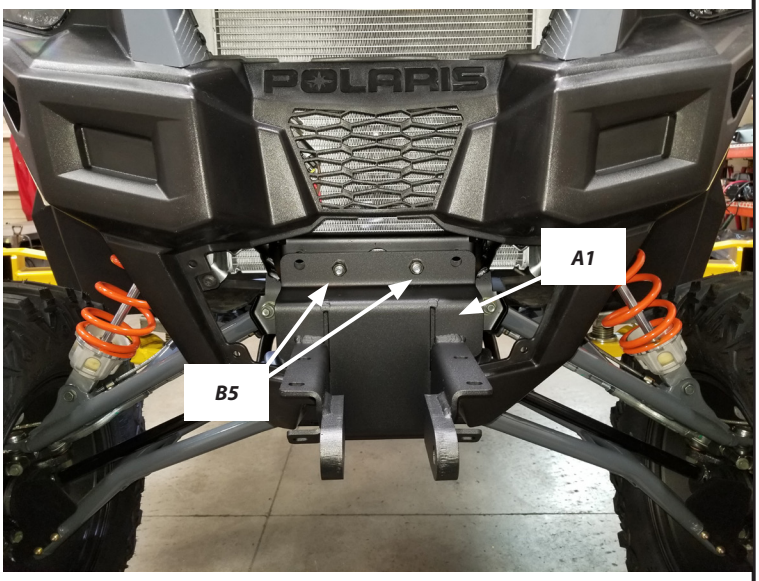

Figure 8

8. Continue installing, using two M12 hex head bolts (B8), lock nuts (B7) and the two lower M8 hex head bolts (B4) and lock nuts (B5).

   Once all the hardware is installed, tighten ALL hardware at this time.

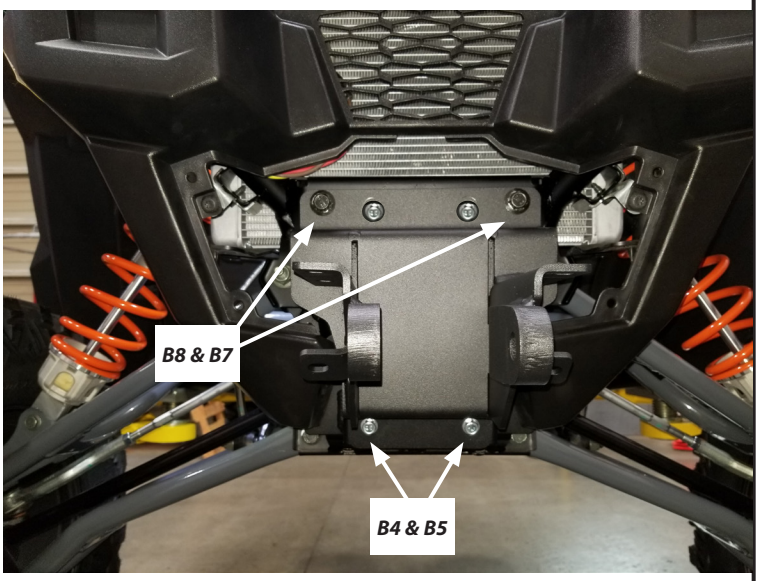

Figure 9

©2019 Warn Industries, Inc. WARN® and the WARN logo are trademarks of Warn Industries Inc.

Due to winch mount interference, you will need to modify the front center plastic before reinstalling on the vehicle.

9. Position front center plastic on vehicle. Mark where the winch mount interferes with plastic. ***NOTE: Each vehicle will be slightly different, image shown is one option.***

Figure 10

10. With plastic on a flat and stable surface, carefully use a pneumatic reciprocating saw or similar to cut the plastic where marked. ***NOTE: It can be helpful to cut a smaller portion out for the first cut and fine tune the cut after test fitting. The edges can be smoothed with a file or sanding disc.***

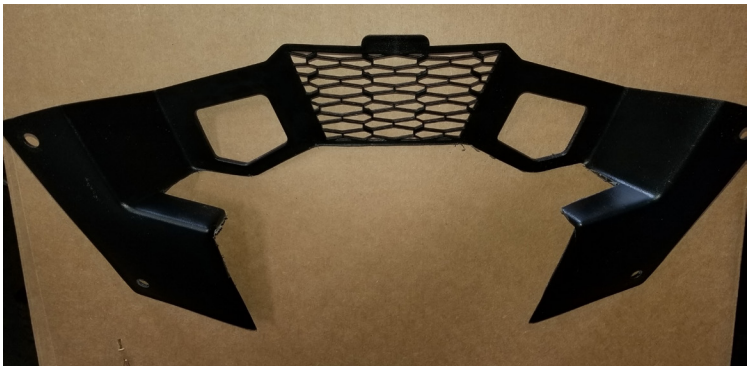

Figure 11

11. Reinstall the front center plastic to the vehicle, using the four push pull pin fasteners.

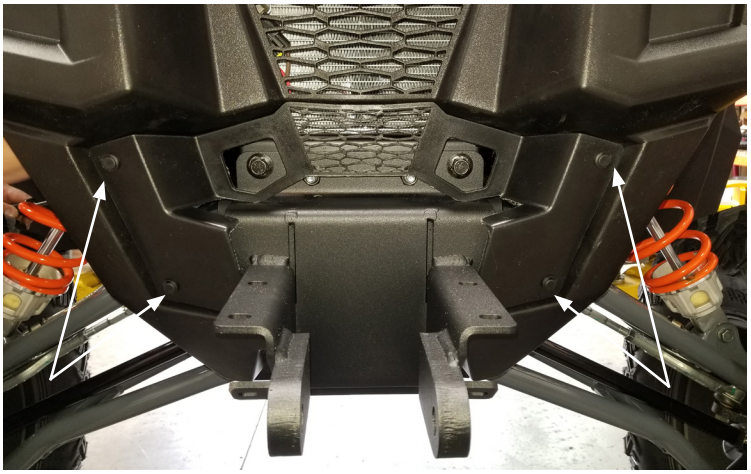

Figure 12

12. Slide the bumper shell (A4) over the bumper mount, threading the D-ring loops through the shell. ***NOTE: Be sure to align the winch mounting holes in the shell with holes in the bumper mount.***

Figure 13

©2019 Warn Industries, Inc. WARN® and the WARN logo are trademarks of Warn Industries Inc.

13. Install fairlead to fairlead plate (A5) using hardware from the winch kit.

Figure 14

14. Connect winch wiring cables to winch per winch installation instructions.
15. Place fairlead plate/fairlead on top of the bumper, lining up winch mounting holes.
16. Place the winch on top of the fairlead plate, aligning mounting feet with holes.
17. Using the access holes and a 13mm socket with extension, secure winch using four non flange M8 hex head bolts (B2) and lock washers (B1). *TIP: Lift one corner of the winch slightly as you begin to install your first bolt. Once all the winch bolts are installed, torque the winch bolts to proper torque specifications on page 3.*

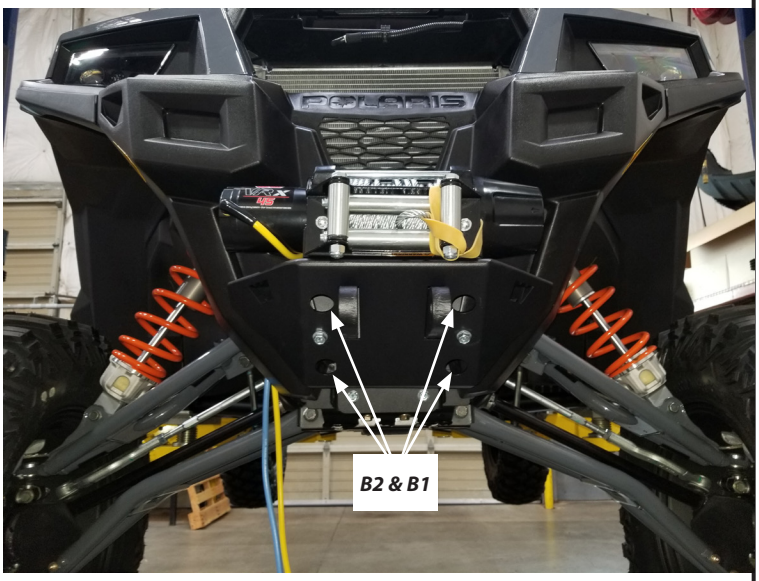

Figure 15

18. Secure bumper using two M8 flange head bolts (B4) and lock nuts (B3).
19. Plug access holes with supplied plugs (B9).

Figure 16

©2019 Warn Industries, Inc. WARN® and the WARN logo are trademarks of Warn Industries Inc.

20. Attach the hook and hook strap to the winch rope.
21. Complete winch wiring per your winch installation instructions from your winch kit.

Figure 17

***OPTIONAL*: Replacing Polaris Winch with WARN VRX Winch**

- Disconnect the battery.
- Disconnect the small wire harness that leads to the contactor (remove zip tie).
- Disconnect ground wire from winch.
- Remove power cables that run from the battery to the top of the contactor.
- Remove the winch mounting bolts.
- Slide the winch out the drivers side of vehicle by flexing the radiator hose out of the way.

At this point you may choose to wire the Warn contactor or use the existing electrical that came with the vehicle.

- Remove the contactor bracket from the Polaris winch leaving everything intact.
- Remove the two short wires that run from the contactor to the winch motor (these will be replaced by the wires you attached to the Warn winch early on).
- Remove the four bolts that hold the factory mount in place.
- Remove the winch mount and drill two holes mount matching the contactor bracket holes.
- Once drilled bolt the bracket to the mount and reinstall to the factory location as shown in picture.
- Route the wires you installed on the WARN winch to the contactor and attach per Warn winch installation instructions. Coil the excess wire and zip tie up and out of the way.
- Connect the power and ground lead wires back onto the contactor from there original location.
- Plug the small harness back to the contactor that you previously removed.
- Reconnect battery.

Installation is complete.

MAINTENANCE / CARE

1. Inspect all parts on the winch, winch mount, and related hardware prior to each use. Replace all hardware that appears rusted or deformed.
2. Inspect all nuts and bolts on the winch, winch mount, and related hardware prior to each use. Tighten all nuts that appear to be loose. Stripped, fractured, or bent bolts or nuts need to be replaced.
3. Check all cables prior to use. Replace cables that look worn or frayed.
4. Check all moving or rotating parts. Remove debris that may inhibit the part from moving freely.

CARELESS INSTALLATION AND OPERATION CAN RESULT IN SERIOUS INJURY OR EQUIPMENT DAMAGE. READ AND UNDERSTAND ALL SAFETY PRECAUTIONS AND OPERATING INSTRUCTIONS BEFORE INSTALLING AND OPERATING THIS PRODUCT.

©2019 Warn Industries, Inc. WARN® and the WARN logo are trademarks of Warn Industries Inc.