INSTALLATION INSTRUCTIONS

Front Bumper

Part Number: 106750

Application: 2016+ CAN AM DEFENDER

GENERAL SAFETY PRECAUTIONS

Your safety, and the safety of others, is very important. To help you make informed decisions about safety, we have provided installation and operating instructions and other information on labels and in this guide. This information alerts you to potential hazards that could hurt you or others. It is not possible to warn you about all potential hazards associated with this product, you must use your own good judgment.

CARELESS INSTALLATION AND OPERATION CAN RESULT IN SERIOUS INJURY OR EQUIPMENT DAMAGE. READ AND UNDERSTAND ALL SAFETY PRECAUTIONS AND OPERATING INSTRUCTIONS BEFORE INSTALLING AND OPERATING THIS PRODUCT.

This guide identifies potential hazards and has important safety messages that help you and others avoid personal injury or death. WARNING and CAUTION are signal words that identify the level of hazard. These signal words mean:

⚠WARNING signals a hazard that could cause serious injury or death, if you do not follow recommendations. ⚠CAUTION signals a hazard that may cause minor to moderate injury, if you do not follow recommendations.

This guide uses NOTICE to call attention to important mechanical information, and Note: to emphasize general information worthy of special attention.

⚠ WARNING

IMPACT AND MOVING PARTS ENTANGLEMENT HAZARD

Failure to observe these instructions could lead to severe injury or death

- **Always** take time to fully read the Instructions and/or Operations Guide, and/or Basic Guide to Winching Techniques, in order to understand your winch and its operations.
- **Always** use extreme caution when drilling on any vehicle. Make sure that all fuel lines, brake lines, electrical wires, and other objects are not punctured or damaged when/if drilling on the vehicle. Thoroughly inspect the area to be drilled (on both sides of material) prior to drilling, and relocate any objects that may be damaged. Failure to inspect the area to be drilled may result in vehicle damage, electrical shock, fire or personal injury.
- **Always** wear safety glasses when installing this kit. A drilling operation will cause flying metal chips. Flying chips can cause eye injury.
- **Always** use extreme caution when cutting and trimming during fitting.
- **Always** remove jewelry and wear eye protection.
- **Never** lean over battery while making connections.
- **Never** route electrical cables:
  - Across any sharp edges.
  - Through or near moving parts.
  - Near parts that become hot.
- **Always** insulate and protect all exposed wiring and electrical terminals.
- **Always** install terminal boots as directed in installation instructions.
- **Always** use appropriate and adequate care in lifting components into place.
- **Always** insure components will remain secure during installation and operation.
- **Always** tighten all nuts and bolts securely, per the installation instructions.
- **Always** perform regular inspections and maintenance on the plow mechanism, fasteners, cable and related hardware.
- **Always** replace all worn or damaged parts before operating.
- **Never** operate this WARN product with damaged or missing parts.

Read installation and operating instructions thoroughly.

WARN INDUSTRIES, INC. 12900 S.E. Capps Road,
Clackamas, OR USA 97015-8903, 1-503-722-1200, FAX: 1-503-722-3000
Customer Service: 1-800-543-9276
Dealer Locator Service: 1-800-910-1122
International Fax: 1-503-722-3005

©2016 Warn Industries, Inc. WARN® and the WARN logo are trademarks of Warn Industries Inc.

⚠ CAUTION

MOVING PARTS ENTANGLEMENT HAZARD

Failure to observe these instructions could lead to minor or moderate injury

- **Always** take time to fully read and understand the installation and Operations Guide included with this product.
- **Never** operate this product if you are under 16 years of age.
- **Never** operate this product when under the influence of drugs, alcohol or medications.

Read installation and operating instructions thoroughly.

NOTICE

EQUIPMENT DAMAGE

- **Never** tow vehicle by attaching a tow bar to the eyelets on the bumper.
- **Never** attach tow bars directly to the bumper. Damage to bumper may occur. WARN bumpers are not designed to be used for flat towing. Consult with the manufacturer of your tow bar system for the proper vehicle tow bar brackets.

Read installation and operating instructions thoroughly.

TABLE OF CONTENTS

Tools Required....page 2
Torque Specifications....page 2
Parts List....page 3
Maintenance/Care....page 3
Installation....page 4-5

BEFORE YOU BEGIN

TOOLS REQUIRED

- Metric wrenches
- Metric sockets
- Wrench and socket extension

TORQUE SPECIFICATIONS

Please use the recommended torque specifications when assembling this product unless otherwise specified in the instructions.

FASTENER SIZE	*FASTENER TORQUE*		*FASTENER SIZE*	*FASTENER TORQUE*	
	lb-ft	*(N.m)*		*lb-ft*	*(N.m)*
1/4"	*8*	*(11)*	*M4*	*(2)*	*3*
5/16"	*17*	*(23)*	*M5*	*(4.5)*	*6*
3/8"	*30*	*(40)*	*M6*	*(7.5)*	*10*
7/16"	*48*	*(66)*	*M8*	*(18)*	*25*
1/2"	*74*	*(100)*	*M10*	*(37)*	*50*
9/16"	*106*	*(144)*			
5/8"	*148*	*(200)*			
3/4"	*269*	*(364)*			

©2016 Warn Industries, Inc. WARN® and the WARN logo are trademarks of Warn Industries Inc.

PARTS LIST

ITEM	PART NUMBER	DESCRIPTION	QTY	ITEM	PART NUMBER	DESCRIPTION	QTY
A1	106753	BUMPER MOUNT	1	B1	93104	M8-25MM BOLT	6
A2	106591	BUMPER SHELL	1	B2	83474	LOCK WASHER	4
A3	28885	FAIRLEAD PLATE	1	B3	22491	M8 LOCK NUT	6
				B4	93105	FLAT WASHER	12
				B5	102248	PLASTIC PLUG	4

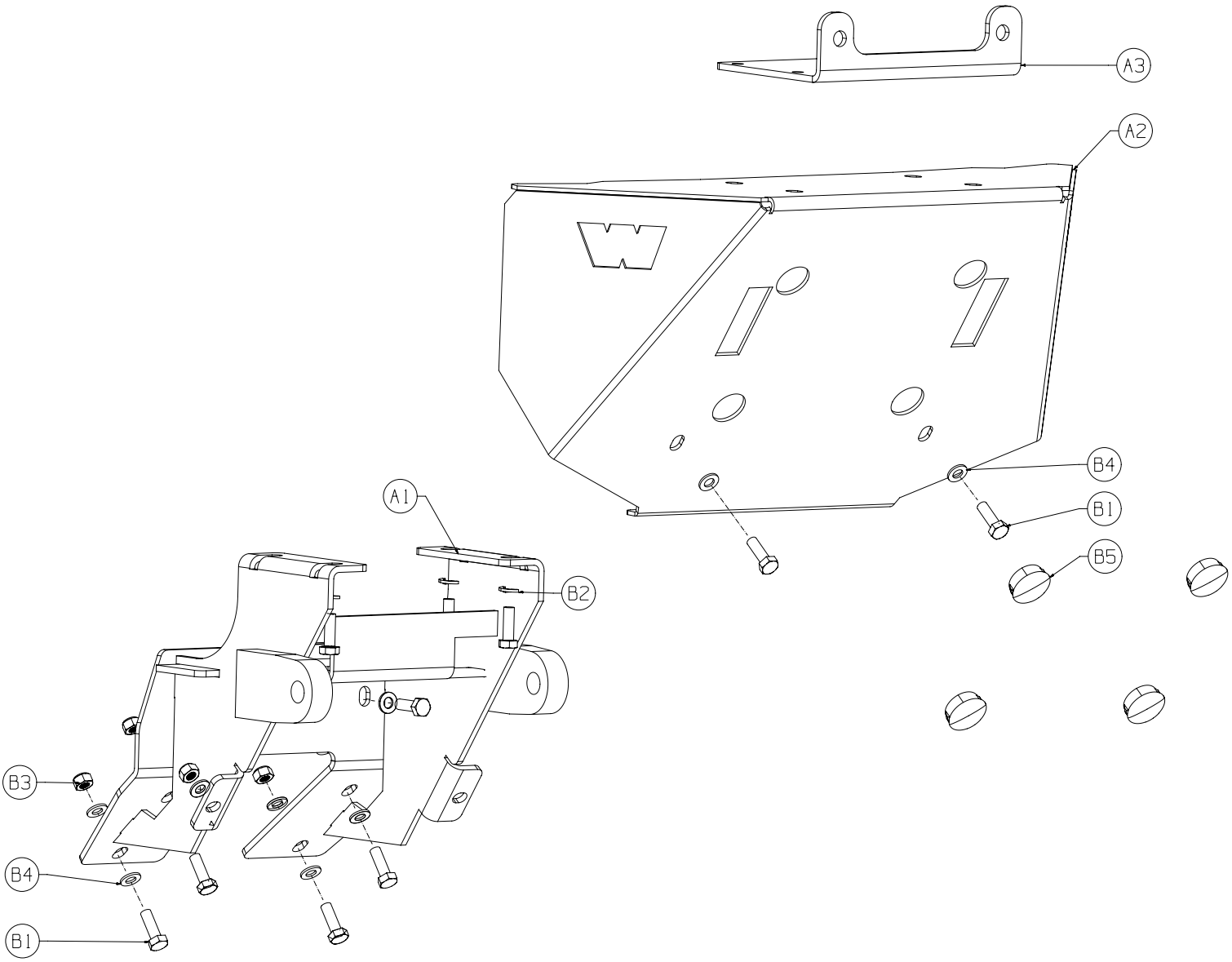

MAINTENANCE / CARE

1. Inspect all parts on the winch, winch mount, and related hardware prior to each use. Replace all hardware that appears rusted or deformed.

2. Inspect all nuts and bolts on the winch, winch mount and related hardware prior to each use. Tighten all nuts that appear to be loose. Stripped, fractured, or bent bolts or nuts need to be replaced.

3. Check all cables prior to use. Replace cables that look worn or frayed.

4. Check all moving or rotating parts. Remove debris that may inhibit the part from moving freely.

©2016 Warn Industries, Inc. WARN® and the WARN logo are trademarks of Warn Industries Inc.

1. Remove any added accessories or winch mounts from vehicle before starting the bumper install.

Figure 1

2. Position the bumper mount (A1) on the front of the factory metal face. Insert six M8 hex head bolts with washers through mount and vehicle.

3. From the backside, secure bumper mount to the vehicle using six washers (B4) and lock nuts (B3). Tighten hardware at this time to torque specifications on page 2.

Figure 2

4. Place the bumper shell over the the bumper mount. ***NOTE: The D-rings on the mount will slip through the holes in the shell, aligning the winch mounting holes in the top of the shell.***

Figure 3

©2016 Warn Industries, Inc. WARN® and the WARN logo are trademarks of Warn Industries Inc.

5. Attach the winch fairlead to the fairlead bracket (A3) using hardware that came with fairlead.

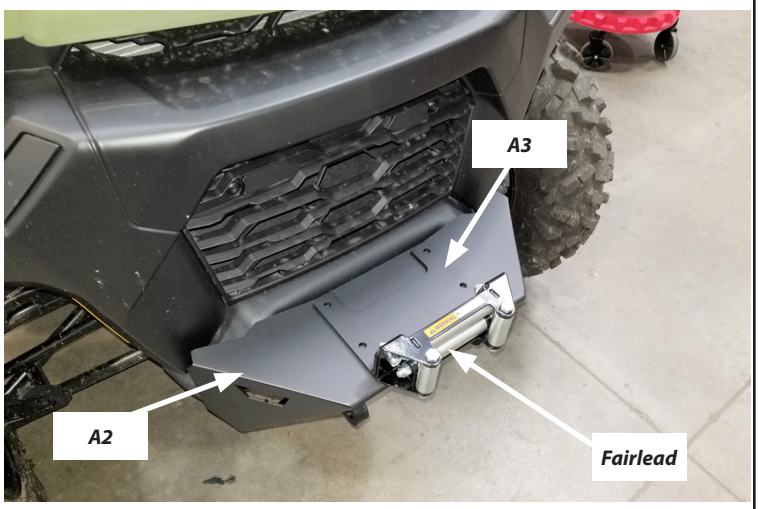

Figure 4

NOTE: For Axon winches:

a. Install the red and black power cables to the winch motor terminals before installing winch to vehicle.

b. Route cables through the grille and up towards the vehicle battery.

6. Place winch on top of the fairlead plate, lining up mounting holes.

NOTE: You will be installing the winch using the longer bolts (B1) supplied in this kit.

7. Using a long socket extension with a 13mm socket, install four M8-25 bolts (B1) with lock washers (B2) through bolt access holes in the front of the bumper shell and up through the shell top, fairlead bracket and into each foot of winch. Do not completely tighten to allow for adjustment. ***IMPORTANT: Do not use the winch mounting bolts supplied in the winch kit, as they will not be long enough.***

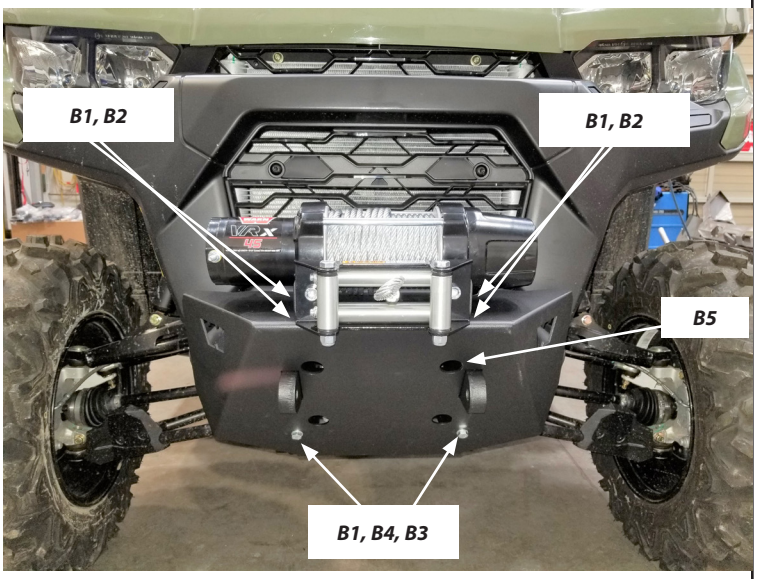

Figure 5

8. From front of the vehicle, install the two lower M8-25 bolts (B1) with washers (B4) through lower mounting holes in bumper shell.

9. Secure lower bolts with one washer (B4) and lock nut (B2). Tighten all winch hardware at this time. Refer to torque specifications on page 2.

10. With winch in freespool (disengage clutch), feed the winch rope through the winch mount fairlead opening.

NOTE: For synthetic winch rope applications, slide the abrasion sleeve on before installing hook.

11. Install hook/hook strap combo to rope using clevis and cotter pin.

12. Complete winch wiring using your winch installation instructions.

13. Install plastic plugs (B6) in winch bolt access holes.

Your installation is complete.

Figure 6

©2016 Warn Industries, Inc. WARN® and the WARN logo are trademarks of Warn Industries Inc.