INSTALLATION INSTRUCTIONS

Front Plow Mount

Part Number: 106576

Application: 2020 Kawasaki KRX 1000

GENERAL SAFETY PRECAUTIONS

Your safety, and the safety of others, is very important. To help you make informed decisions about safety, we have provided installation and operating instructions and other information on labels and in this guide. This information alerts you to potential hazards that could hurt you or others. It is not possible to warn you about all potential hazards associated with this product, you must use your own good judgment.

CARELESS INSTALLATION AND OPERATION CAN RESULT IN SERIOUS INJURY OR EQUIPMENT DAMAGE. READ AND UNDERSTAND ALL SAFETY PRECAUTIONS AND OPERATING INSTRUCTIONS BEFORE INSTALLING AND OPERATING THIS PRODUCT.

This guide identifies potential hazards and has important safety messages that help you and others avoid personal injury or death. WARNING and CAUTION are signal words that identify the level of hazard. These signal words mean:

⚠WARNING signals a hazard that could cause serious injury or death, if you do not follow recommendations. ⚠CAUTION signals a hazard that may cause minor to moderate injury, if you do not follow recommendations.

This guide uses NOTICE to call attention to important mechanical information, and Note: to emphasize general information worthy of special attention.

⚠ WARNING

IMPACT AND MOVING PARTS ENTANGLEMENT HAZARD

Failure to observe these instructions could lead to severe injury or death

- **Always** Read the Plow Operator's Manual, the Winch Operator's Manual and all warning labels before operating.
- **Always** use extreme caution when drilling on any vehicle. Make sure that all fuel lines, brake lines, electrical wires, and other objects are not punctured or damaged when/if drilling on the vehicle. Thoroughly inspect the area to be drilled (on both sides of material) prior to drilling, and relocate any objects that may be damaged. Failure to inspect the area to be drilled may result in vehicle damage, electrical shock, fire or personal injury.
- **Always** wear safety glasses when installing this kit. A drilling operation will cause flying metal chips. Flying chips can cause eye injury.
- **Always** use extreme caution when cutting and trimming during fitting.
- **Always** remove jewelry and wear eye protection.
- **Never** lean over battery while making connections.
- **Never** route electrical cables:
  - Across any sharp edges.
  - Through or near moving parts.
  - Near parts that become hot.
- **Always** insulate and protect all exposed wiring and electrical terminals.
- **Always** install terminal boots as directed in installation instructions.
- **Always** use appropriate and adequate care in lifting components into place.
- **Always** insure components will remain secure during installation and operation.
- **Always** tighten all nuts and bolts securely, per the installation instructions.
- **Always** operate the vehicle at a walking speed with the blade installed. Never exceed 5 mph (8 km/h), even with blade up.
- **Always** plow cautiously, impact with hidden or stationary object may cause the vehicle to stop suddenly or go out of control.
- **Never** operate the vehicle on slopes greater than 10 degrees with the plow installed.
- **Never** stand or ride on the plow.
- **Always** stay clear of moving parts and joints. Always keep others away when operating or adjusting plow.
- **Always** perform regular inspections and maintenance on the plow mechanism, fasteners, cable and related hardware.
- **Always** replace all worn or damaged parts before operating.
- **Never** operate this WARN product with damaged or missing parts.
- **Always** drive slowly over bumpy and rough terrain. Driving at speeds that cause the plow to bounce while in the up position can cause the winch to back-drive, causing the plow to work its way down. This may result in the plow impacting a stationary object and cause damage to the vehicle and operator injury or death.
- **Always** drive at speeds such that the plow does not bounce and be aware of the plow position while driving at all times.
- **Always** be aware that the purpose of the j-bolt is to break the connection between the plow and the winch, to prevent serious damage to the ATV if the plow is raised too high. The plow blade will drop suddenly if the j-bolt breaks, so always be sure there are no bystanders when you raise and lower the plow.
- **Never** raise the top of the plow above the headlights of the ATV, as it may damage the vehicle and plow.
- **Always** replace a deformed or broken j-bolt with the spare j-bolt included in the kit.

Read installation and operating instructions thoroughly.

WARN INDUSTRIES, INC. 12900 S.E. Capps Road,
Clackamas, OR USA 97015-8903, 1-503-722-1200, FAX: 1-503-722-3000
Customer Service: 1-800-543-9276
Dealer Locator Service: 1-800-910-1122
International Fax: 1-503-722-3005

©2016 Warn Industries, Inc. WARN® and the WARN logo are trademarks of Warn Industries Inc.

⚠ CAUTION

MOVING PARTS ENTANGLEMENT HAZARD

Failure to observe these instructions could lead to minor or moderate injury

- **Always** take time to fully read and understand the installation and Operations Guide included with this product.
- **Never** operate this product if you are under 16 years of age.
- **Never** operate this product when under the influence of drugs, alcohol or medications.

Read installation and operating instructions thoroughly.

NOTICE

EQUIPMENT DAMAGE

- **Never** tow vehicle by attaching a tow bar to the eyelets on the bumper.
- **Never** attach tow bars directly to the bumper. Damage to bumper may occur. WARN bumpers are not designed to be used for flat towing. Consult with the manufacturer of your tow bar system for the proper vehicle tow bar brackets..

Read installation and operating instructions thoroughly.

TABLE OF CONTENTS

Tools Required....page 2
Torque Specifications....page 2
Parts List....page 3
Installation....page 4-5
Maintenance/Care....page 5

BEFORE YOU BEGIN

TOOLS REQUIRED

- Metric wrenches
- Metric sockets
- Wrench and socket extension

TORQUE SPECIFICATIONS

Please use the recommended torque specifications when assembling this product unless otherwise specified in the instructions.

FASTENER SIZE	*FASTENER TORQUE*		*FASTENER SIZE*	*FASTENER TORQUE*	
	lb-ft	*(N.m)*		*lb-ft*	*(N.m)*
1/4"	*8*	*(11)*	*M4*	*(2)*	*3*
5/16"	*17*	*(23)*	*M5*	*(4.5)*	*6*
3/8"	*30*	*(40)*	*M6*	*(7.5)*	*10*
7/16"	*48*	*(66)*	*M8*	*(18)*	*25*
1/2"	*74*	*(100)*	*M10*	*(37)*	*50*
9/16"	*106*	*(144)*			
5/8"	*148*	*(200)*			
3/4"	*269*	*(364)*			

©2016 Warn Industries, Inc. WARN® and the WARN logo are trademarks of Warn Industries Inc.

PARTS LIST

ITEM	PART NUMBER	DESCRIPTION	QTY
A1	106580	PLOW MOUNT	1
A2	106640	PLOW FLANGE	1
A3	82466	TERMINATION STRAP	1

ITEM	PART NUMBER	DESCRIPTION	QTY
B1	35136	RETAINING PIN	2
B2	63356	M6 HEX HEAD BOLT	2
B3	89084	M8 x 70 HEX HEAD BOLT	2
B4	93105	M8 FLAT WASHER	8
B5	22491	M8 LOCK NUT	4
B6	93104	M8 x 25 HEX HEAD BOLT	2
B7	83349	M6 FLAT WASHER	2

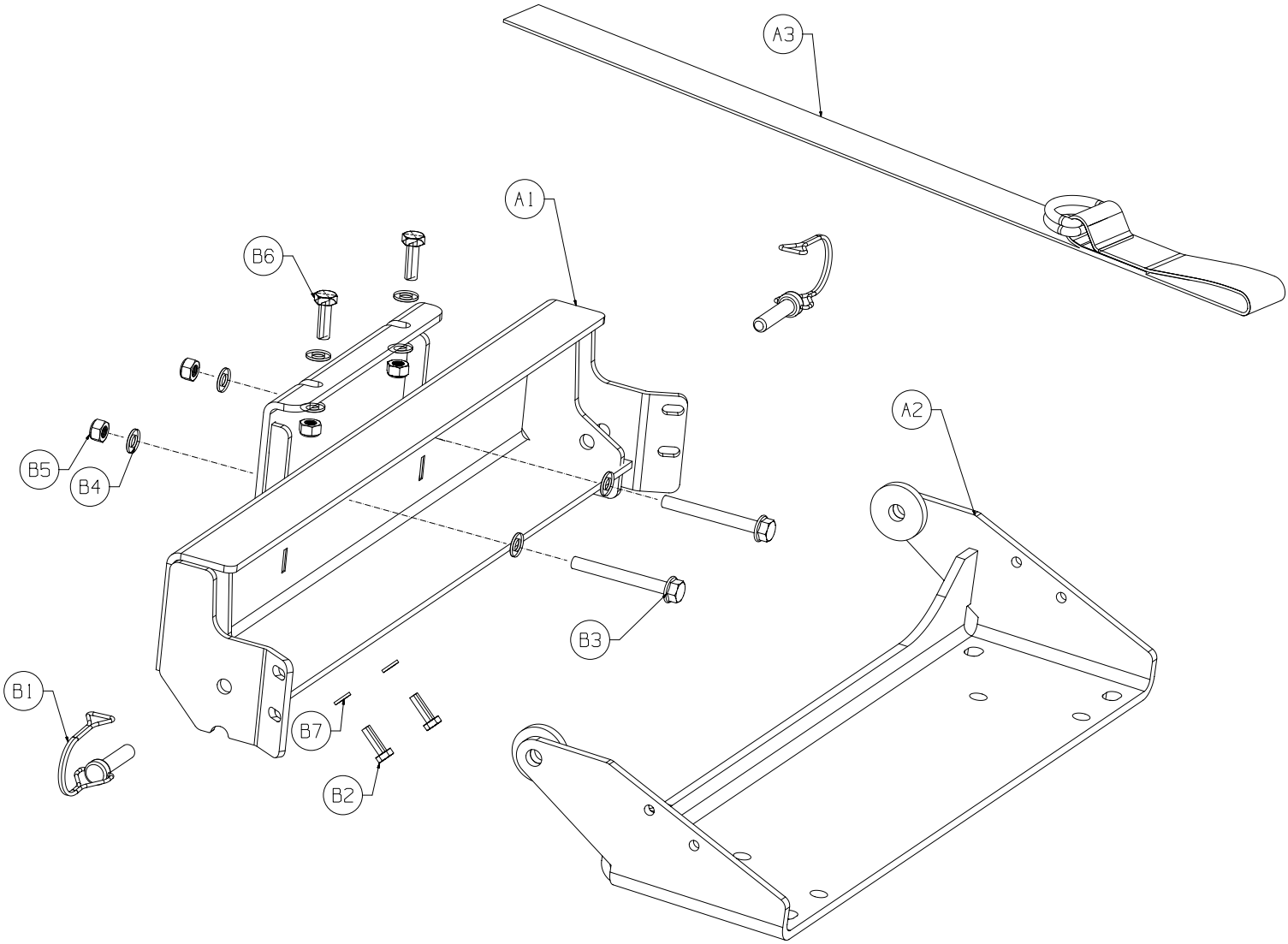

©2016 Warn Industries, Inc. WARN® and the WARN logo are trademarks of Warn Industries Inc.

NOTE: This Warn Front Plow Mount only works with the Warn Winch Mount.

1. Remove the hook and fairlead from the winch mount bracket.

2. Remove the M8 x 70 bolts, flat washers, spacers and lock nut from the front lower winch mount holes.

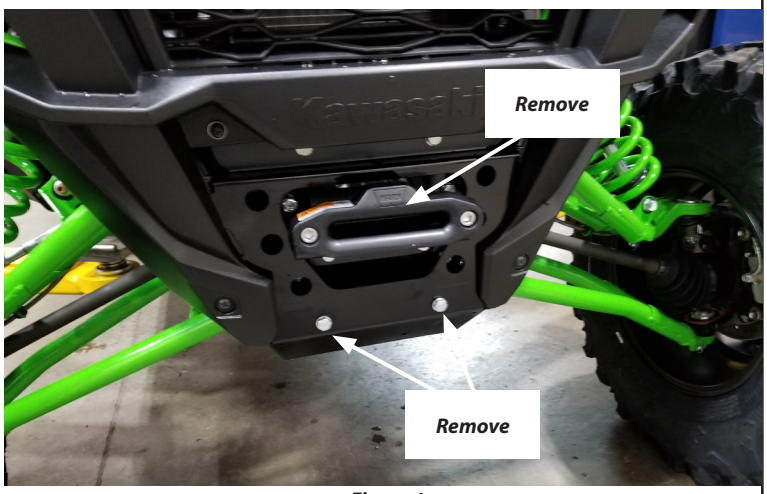

Figure 1

3. Hold the plow mount (A1) up so it just touches the under side of the winch fairlead bracket.

4. Install the previously removed M8 x 70 bolts with flat washers through the lower plow mounting holes, winch mount and vehicle frame. ***NOTE: If any hardware is damaged in any way use the included hardware instead.***

5. Secure with previously removed spacers, flat washer, and lock nut. ***NOTE: If any hardware is damaged in any way use the included hardware instead.*** *Do not tighten completely to allow for adjustment.*

6. Install two M8-25mm bolts (B6) with washers (B3) down through the top of the fairlead bracket and plow mount.

7. Secure bolts and with flat washer (B4) and lock nuts (B5). *Do not tighten completely to allow for adjustment.*

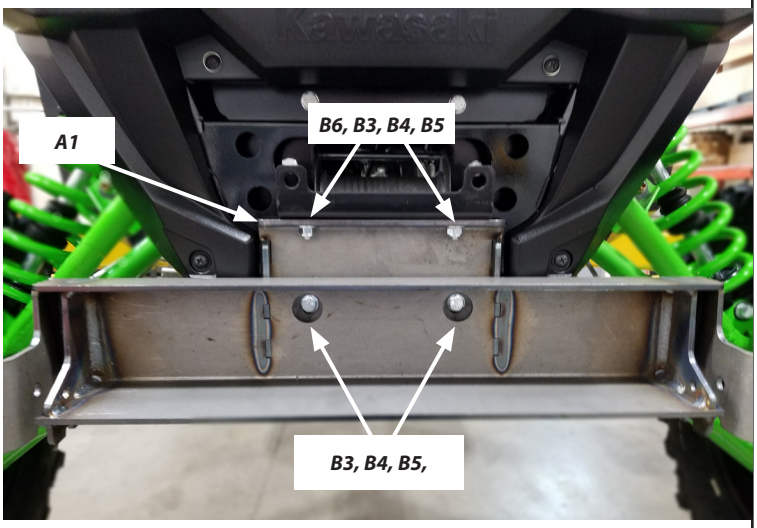

Figure 2

8. From underneath the plow mount, install the two M6 bolts (B2) with flat washers (B7) through the mounting holes and into the threaded holes in the vehicle frame.

9. Tighten all plow mount hardware now. We recommend starting with the front, next tighten the top and ending with the lower (underside). Refer to torque specifications on page 2.

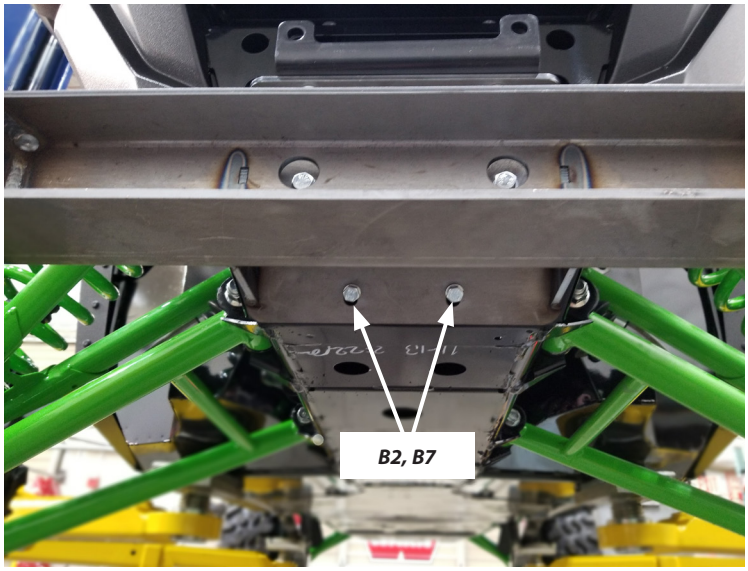

Figure 3

©2016 Warn Industries, Inc. WARN® and the WARN logo are trademarks of Warn Industries Inc.

INSTALLATION INSTRUCTIONS

Figure 4

10. Install plow flange to plow mount using included retaining pins (B1). *Image showing mount off vehicle for clarity purposes, refer to exploded view on page 3 for more detail.*

11. Complete your plow installation per your plow system installation instructions.

12. Attach the termination strap (A3) to the winch mount's attachment point.

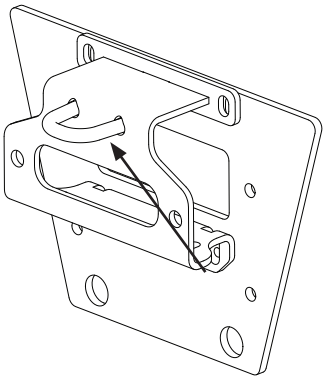

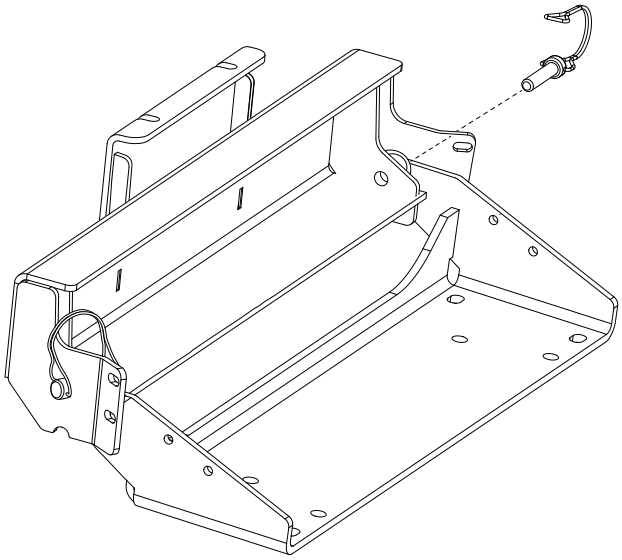

Figure 5

Your installation is complete.

MAINTENANCE / CARE

1. Inspect all parts on the winch, winch mount, and related hardware prior to each use. Replace all hardware that appears rusted or deformed.

2. Inspect all nuts and bolts on the winch, winch mount and related hardware prior to each use. Tighten all nuts that appear to be loose. Stripped, fractured, or bent bolts or nuts need to be replaced.

3. Check all cables prior to use. Replace cables that look worn or frayed.

4. Check all moving or rotating parts. Remove debris that may inhibit the part from moving freely.

©2016 Warn Industries, Inc. WARN® and the WARN logo are trademarks of Warn Industries Inc.