INSTALLATION INSTRUCTIONS
WINCH MOUNTING KIT

Part Number: 102102

Application: 2020 KAWASAKI KRX 1000

GENERAL SAFETY PRECAUTIONS

Your safety, and the safety of others, is very important. To help you make informed decisions about safety, we have provided installation and operating instructions and other information on labels and in this guide. This information alerts you to potential hazards that could hurt you or others. It is not possible to warn you about all potential hazards associated with this product, you must use your own good judgment.

CARELESS INSTALLATION AND OPERATION CAN RESULT IN SERIOUS INJURY OR EQUIPMENT DAMAGE. READ AND UNDERSTAND ALL SAFETY PRECAUTIONS AND OPERATING INSTRUCTIONS BEFORE INSTALLING AND OPERATING THIS PRODUCT.

This guide identifies potential hazards and has important safety messages that help you and others avoid personal injury or death. WARNING and CAUTION are signal words that identify the level of hazard. These signal words mean:

⚠**WARNING** signals a hazard that could cause serious injury or death, if you do not follow recommendations. ⚠**CAUTION** signals a hazard that may cause minor to moderate injury, if you do not follow recommendations.

This guide uses ***NOTICE*** to call attention to important mechanical information, and Note: to emphasize general information worthy of special attention.

⚠ WARNING

Impact and Moving Parts Entanglement Hazard

FAILURE TO OBSERVE THESE INSTRUCTIONS COULD LEAD TO SEVERE INJURY OR DEATH

- **Always** Know Your Winch. Take time to fully read the Instructions and/or Operations Guide, and/or Basic Guide to Winching Techniques, in order to understand your winch and its operations.
- **Never** work under vehicle before properly securing vehicle.
- **Always** use appropriate and adequate care in lifting components into place.
- **Never** work under vehicle before properly securing vehicle.
- **Always** use appropriate and adequate care in lifting components into place.
- **Never** use a jack to support the vehicle.
- **Always** use jack stands in pairs to support the vehicle.
- **Always** use jacks or jack stands only on a hard, stable, and level surface.
- **Never** exceed the rated capacity of a jack or jack stands.
- **Always** verify that the parking brake is set, the transmission is in park (automatic) or reverse (manual) and the rear wheels are blocked before working on vehicle.
- **Never** work under vehicle before properly securing vehicle.
- **Always** use appropriate and adequate care in lifting components into place.
- **Always** insure components will remain secure during installation and operation.
- **Always** tighten all nuts and bolts securely, per the installation and operation.
- **Always** perform regular inspections and maintenance on the winch, winch mount and related hardware.
- **Always** replace all worn or damaged parts before operating.
- **Never** operate this WARN product with damaged or missing parts.
- **Always** use extreme caution when drilling on any vehicle. Make sure that all fuel lines, brake lines, electrical wires, and other objects are not punctured or damaged when / if drilling on the vehicle. Thoroughly inspect the area to be drilled (on both sides of material) prior to drilling, and relocate any objects that may be damaged. Failure to inspect the area to be drilled may result in vehicle damage, electrical shock, fire or personal injury.
- **Always** use extreme caution when cutting and trimming during fitting.
- **Always** wear safety glasses when installing this kit. A drilling operation will cause flying metal chips. Flying chips can cause eye injury.
- **Always** remove jewelry and wear eye protection.
- **Never** lean over battery while making connections.
- **Never** route electrical cables across any sharp edge, through or near moving parts, near parts that become hot.

Read installation and operating instructions thoroughly.

WARN INDUSTRIES, INC. 12900 S.E. Capps Road,
Clackamas, OR USA 97015-8903, 1-503-722-1200, FAX: 1-503-722-3000
Customer Service: 1-800-543-9276
Dealer Locator Service: 1-800-910-1122
International Sales/Customer Service: 1-503-722-3008
International Fax: 1-503-722-3005

©2021 Warn Industries, Inc. WARN® and the WARN logo are trademarks of Warn Industries Inc.

⚠ CAUTION

Moving Parts Entanglement Hazard

FAILURE TO OBSERVE THESE INSTRUCTIONS COULD LEAD TO MINOR OR MODERATE INJURY

- Part edges may be sharp!
- Always use proper posture / lifting technique or get lifting assistance while handling and installing product.

Read installation and operating instructions thoroughly.

TABLE OF CONTENTS

Tools Required....page 2
Torque Specifications....page 2
Parts List....page 3
Installation....page 4-6
Maintenance/Care....page 6

BEFORE YOU BEGIN

**** This kit is designed to use VRX long drum (VRX45-45s) winches only***

TOOLS REQUIRED

- Standard and Metric wrenches
- Standard and Metric sockets
- Ratchet
- Extension

TORQUE SPECIFICATIONS

Please use the recommended torque specifications when assembling this product unless otherwise specified in the instructions.

FASTENER SIZE	FASTENER TORQUE		FASTENER SIZE	FASTENER TORQUE	
	lb-ft	(N.m)		lb-ft	(N.m)
1/4"	8	(11)	M4	(2)	3
5/16"	17	(23)	M5	(4.5)	6
3/8"	30	(40)	M6	(7.5)	10
7/16”	48	(66)	M8	(18)	25
1/2"	74	(100)	M10	(37)	50
9/16”	106	(144)			
5/8"	148	(200)			
3/4”	269	(364)			

©2021 Warn Industries, Inc. WARN® and the WARN logo are trademarks of Warn Industries Inc.

PARTS LIST

ITEM	PN	DESCRIPTION	QTY
A1	106573	WINCH PLATE	1
A2	107823	FAIRLEAD BRACKET	1

ITEM	PN	DESCRIPTION	QTY
B1	64110	M8-30MM	2
B2	34402	M8-20MM	2
B3	89084	M8-70MM	2
B4	83474	LOCK WASHER	2
B5	93105	FLAT WASHER	4
B6	22491	M8 LOCK NUT	4
B7	80065	SPACER	2

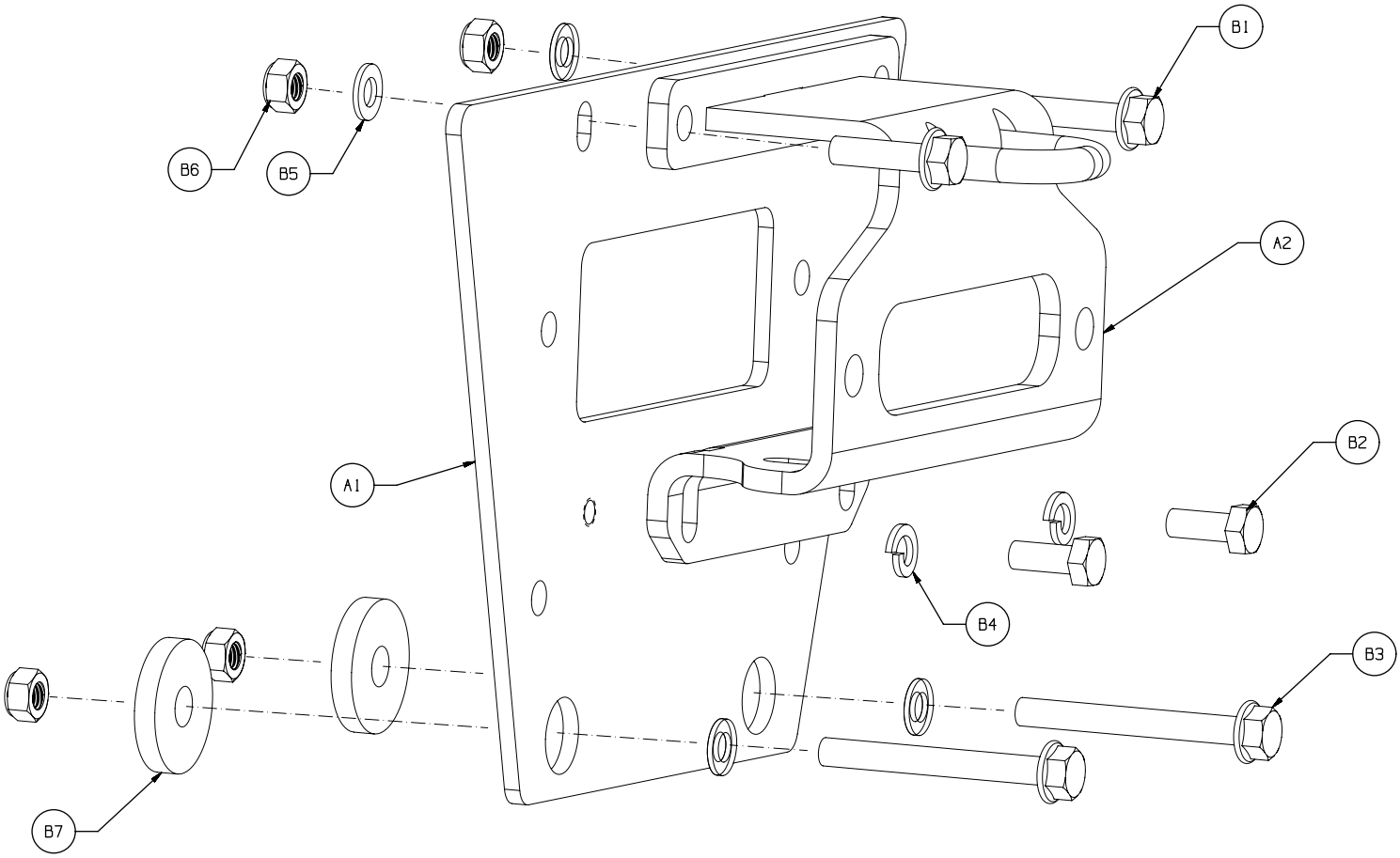

©2021 Warn Industries, Inc. WARN® and the WARN logo are trademarks of Warn Industries Inc.

1. Remove any accessories from the front of the vehicle that may obstruct the winch mount installation.

Figure 2

2. Arrange the winch plate with the large holes facing down.

3. Slide the winch plate behind the vertical tubes in the front frame work of the vehicle.

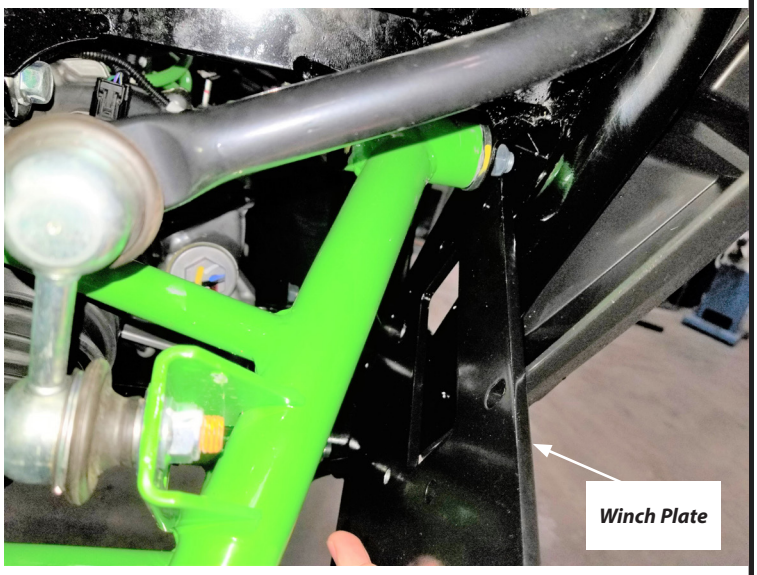

Figure 3

4. Position plate between the front tubes, aligning holes.

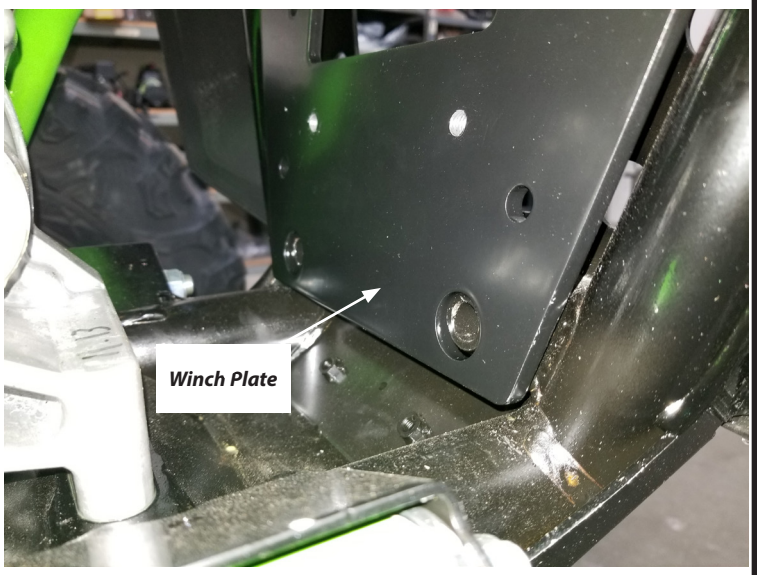

Figure 4

©2021 Warn Industries, Inc. WARN® and the WARN logo are trademarks of Warn Industries Inc.

5. Install the two M8 x 70 bolts (B3) with flat washers (B5) through the front lower mounting holes.

6. Loosely, secure lower bolts with one spacer (B7) and lock nut (B6). *Refer to exploded view on page 3.*

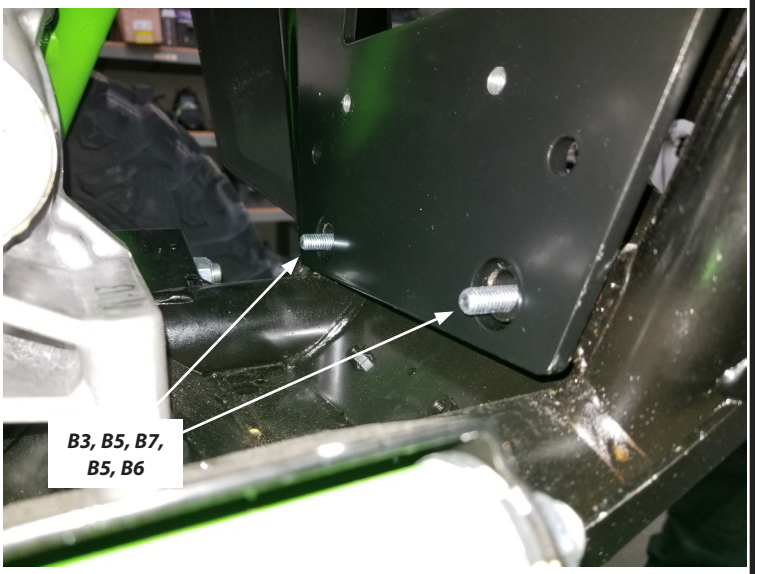

Figure 5

TIP: Before installing winch, attach the blue and yellow cables to the winch motor terminals.

7. From the left side of the vehicle, slide the winch (clutch end in first and winch feet forward) into place. ***NOTE: This will result with the winch clutch handle on the passenger side of the vehicle.***

8. Install winch using hardware included in your winch kit. Tighten to torque on page 2

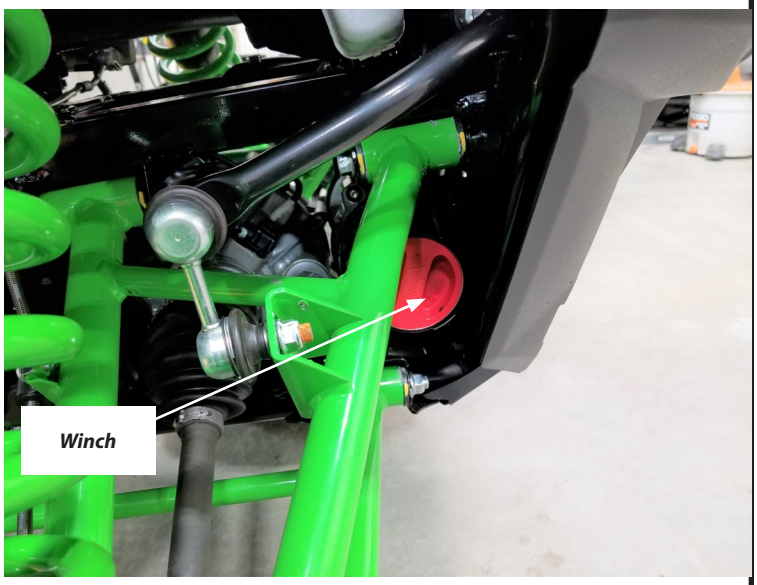

Figure 6

9. Attach the fairlead bracket (A2) to the mount using two M8 x 30mm bolts (B1) through the upper bracket, mount and frame holes. Secure using two flat washers (B5) and lock nuts (B6).

10. Install the remaining M8-20mm bolts (B2) and lock washers (B4) through the lower fairlead bracket holes and into the mount.

11. Tighten all hardware now per torque specifications on page 2.

12. With winch in freespool (disengage clutch), feed the winch rope through the winch mount fairlead opening.

13 Install fairlead to the fairlead bracket using hardware supplied in winch kit. Continue to pull winch rope through fairlead opening.

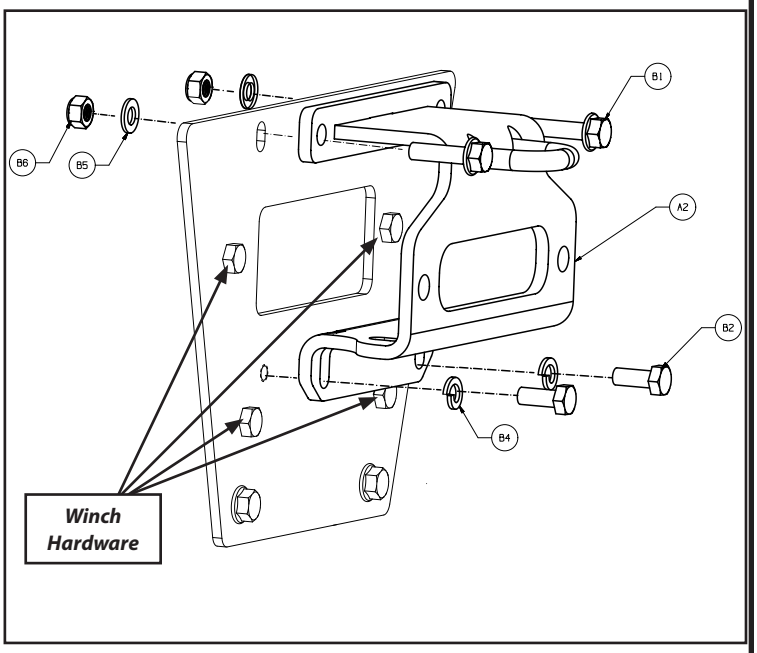

Figure 7

©2021 Warn Industries, Inc. WARN® and the WARN logo are trademarks of Warn Industries Inc.

INSTALLATION INSTRUCTIONS

NOTE: For synthetic winch rope applications, slide the abrasion sleeve on before installing hook.

14. Install hook/hook strap combo to rope using clevis and cotter pin.

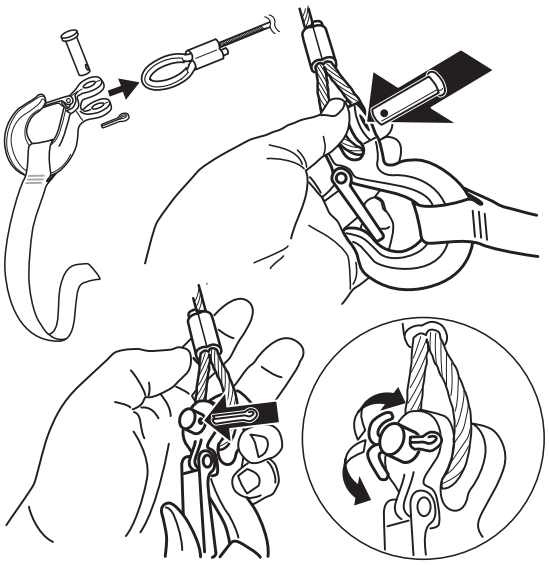

Figure 8

MAINTENANCE / CARE

1. Inspect all parts on the winch, winch mount, and related hardware prior to each use. Replace all hardware that appears rusted or deformed.
2. Inspect all nuts and bolts on the winch, winch mount and related hardware prior to each use. Tighten all nuts that appear to be loose. Stripped, fractured, or bent bolts or nuts need to be replaced.
3. Check all cables prior to use. Replace cables that look worn or frayed.
4. Check all moving or rotating parts. Remove debris that may inhibit the part from moving freely.

©2021 Warn Industries, Inc. WARN® and the WARN logo are trademarks of Warn Industries Inc.