INSTALLATION INSTRUCTIONS
WINCH MOUNT

Part Numbers: 101678

Application: 2018 Kawasaki Teryx

GENERAL SAFETY PRECAUTIONS

Your safety, and the safety of others, is very important. To help you make informed decisions about safety, we have provided installation and operating instructions and other information on labels and in this guide. This information alerts you to potential hazards that could hurt you or others. It is not possible to warn you about all potential hazards associated with this product, you must use your own good judgment.

CARELESS INSTALLATION AND OPERATION CAN RESULT IN SERIOUS INJURY OR EQUIPMENT DAMAGE. READ AND UNDERSTAND ALL SAFETY PRECAUTIONS AND OPERATING INSTRUCTIONS BEFORE INSTALLING AND OPERATING THIS PRODUCT.

This guide identifies potential hazards and has important safety messages that help you and others avoid personal injury or death. WARNING and CAUTION are signal words that identify the level of hazard. These signal words mean:

⚠WARNING signals a hazard that could cause serious injury or death, if you do not follow recommendations. ⚠ CAUTION signals a hazard that may cause minor to moderate injury, if you do not follow recommendations.

This guide uses NOTICE to call attention to important mechanical information, and Note: to emphasize general information worthy of special attention.

⚠ WARNING

Impact and Moving Parts Entanglement Hazard

FAILURE TO OBSERVE THESE INSTRUCTIONS COULD LEAD TO SEVERE INJURY OR DEATH

- Always Know Your Winch. Take time to fully read the Instructions and/or Operations Guide, and/or Basic Guide to Winching Techniques, in order to understand your winch and its operations.
- Never work under vehicle before properly securing vehicle.
- Always use appropriate and adequate care in lifting components into place.
- Never work under vehicle before properly securing vehicle.
- Always use appropriate and adequate care in lifting components into place.
- Never use a jack to support the vehicle.
- Always use jack stands in pairs to support the vehicle.
- Always use jacks or jack stands only on a hard, stable, and level surface.
- Never exceed the rated capacity of a jack or jack stands.
- Always verify that the parking brake is set, the transmission is in park (automatic) or reverse (manual) and the rear wheels are blocked before working on vehicle.
- Never work under vehicle before properly securing vehicle.
- Always use appropriate and adequate care in lifting components into place.
- Always insure components will remain secure during installation and operation.
- Always tighten all nuts and bolts securely, per the installation and operation.
- Always perform regular inspections and maintenance on the winch, winch mount and related hardware.
- Always replace all worn or damaged parts before operating.
- Never operate this WARN product with damaged or missing parts.
- Always use extreme caution when drilling on any vehicle. Make sure that all fuel lines, brake lines, electrical wires, and other objects are not punctured or damaged when / if drilling on the vehicle. Thoroughly inspect the area to be drilled (on both sides of material) prior to drilling, and relocate any objects that may be damaged. Failure to inspect the area to be drilled may result in vehicle damage, electrical shock, fire or personal injury.
- Always use extreme caution when cutting and trimming during fitting.
- Always wear safety glasses when installing this kit. A drilling operation will cause flying metal chips. Flying chips can cause eye injury.
- Always remove jewelry and wear eye protection.
- Never lean over battery while making connections.
- Never route electrical cables across any sharp edge, through or near moving parts, near parts that become hot.

Read installation and operating instructions thoroughly.

WARN INDUSTRIES, INC. 12900 S.E. Capps Road,
Clackamas, OR USA 97015-8903, 1-503-722-1200, FAX: 1-503-722-3000
Customer Service: 1-800-543-9276
Dealer Locator Service: 1-800-910-1122
International Sales/Customer Service: 1-503-722-3008
International Fax: 1-503-722-3005

⚠ CAUTION

Moving Parts Entanglement Hazard

FAILURE TO OBSERVE THESE INSTRUCTIONS COULD LEAD TO MINOR OR MODERATE INJURY

- **Part edges may be sharp!**
- **Always use proper posture / lifting technique or get lifting assistance while handling and installing product.**

Read installation and operating instructions thoroughly.

NOTICE

Equipment Damage

- **Never tow vehicle by attaching a tow bar to the eyelets on the bumper.**
- **Do not attach tow bars directly to the bumper. Damage to bumper may occur. WARN bumpers are not designed to be used for flat towing. Consult with the manufacturer of your tow bar system for the proper vehicle tow bar brackets.**

Read installation and operating instructions thoroughly.

TABLE OF CONTENTS

Tools Required....page 2
Torque Specifications....page 2
Parts List....page 3
Installation....page 4-5

TOOLS REQUIRED

- Sockets: Standard and Metric
- End Wrenches: Standard and Metric

TORQUE SPECIFICATIONS

Please use the recommended torque specifications when assembling this product unless otherwise specified in the instructions.

FASTENER SIZE	*FASTENER TORQUE*		*FASTENER SIZE*	*FASTENER TORQUE*	
	lb-ft	*(N.m)*		*lb-ft*	*(N.m)*
1/4"	*8*	*(11)*	*M4*	*(2)*	*3*
5/16"	*17*	*(23)*	*M5*	*(4.5)*	*6*
3/8"	*30*	*(40)*	*M6*	*(7.5)*	*10*
7/16"	*48*	*(66)*	*M8*	*(18)*	*25*
1/2"	*74*	*(100)*	*M10*	*(37)*	*50*
9/16"	*106*	*(144)*			
5/8"	*148*	*(200)*			
3/4"	*269*	*(364)*			

PARTS LIST

ID	Part No.	Description	Qty
A1	102390	WINCH MOUNT PLATE	1
A2	102394	MOUNTING BRACKET STRAP	1

ID	Part No.	Description	Qty
B1	71588	M8 LOCKING FLANGE NUT	2
B2	1324	5/16 FLAT WASHER	2
B3	79882	M10 CARRIAGE BOLT	4
B4	87166	M10 LOCKING FLANGE NUT	4
B5	13454	M8 HEX BOLT	2
B6	79462	M10 HEX HD FLANGE BOLT	2

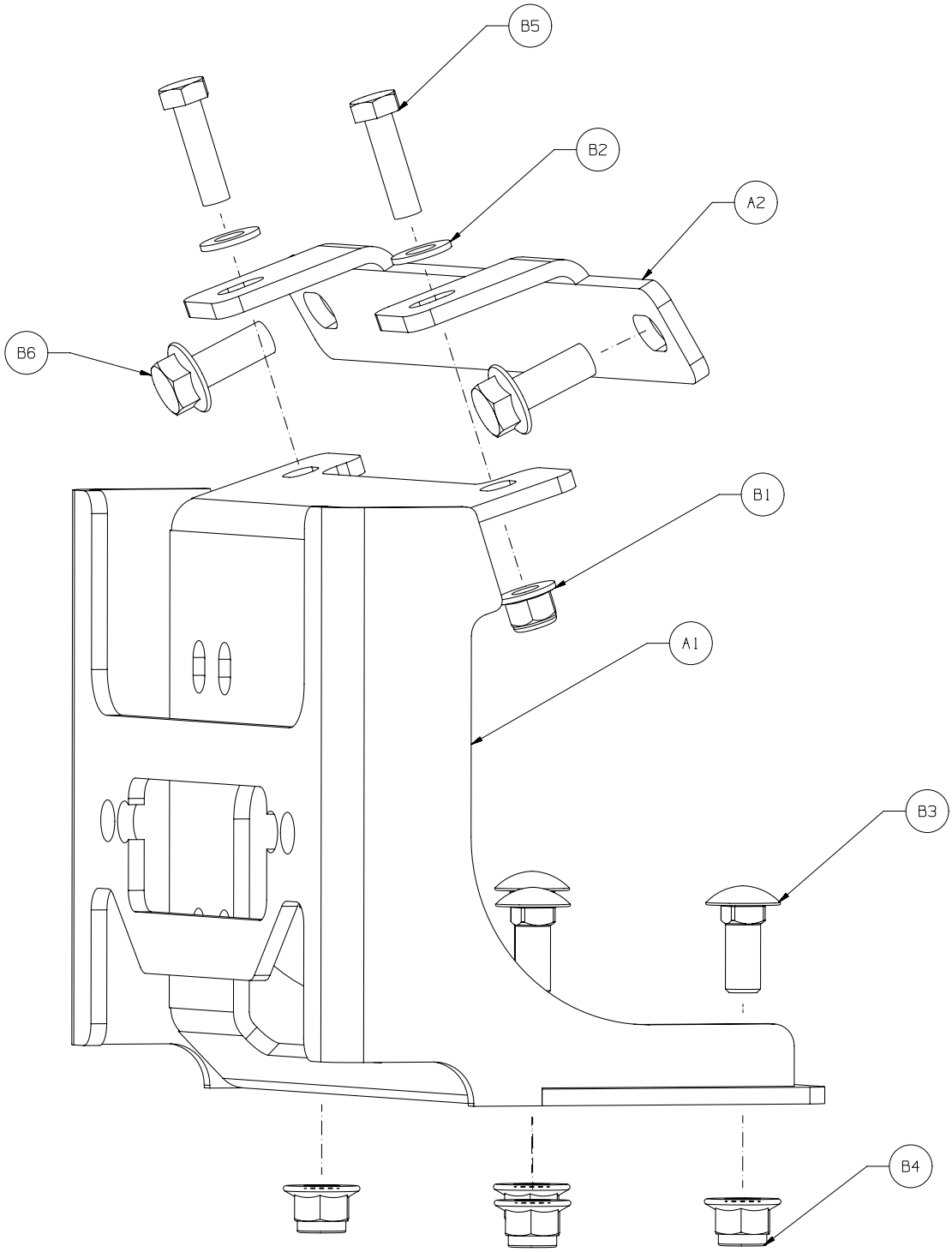

Figure 1

1. Remove the two upper cross support bolts. ***NOTE: You will not be reusing hardware.***

2. Remove the skid plate by removing the two factory fasteners. ***NOTE: Keep hardware as you will be reinstalling them.***

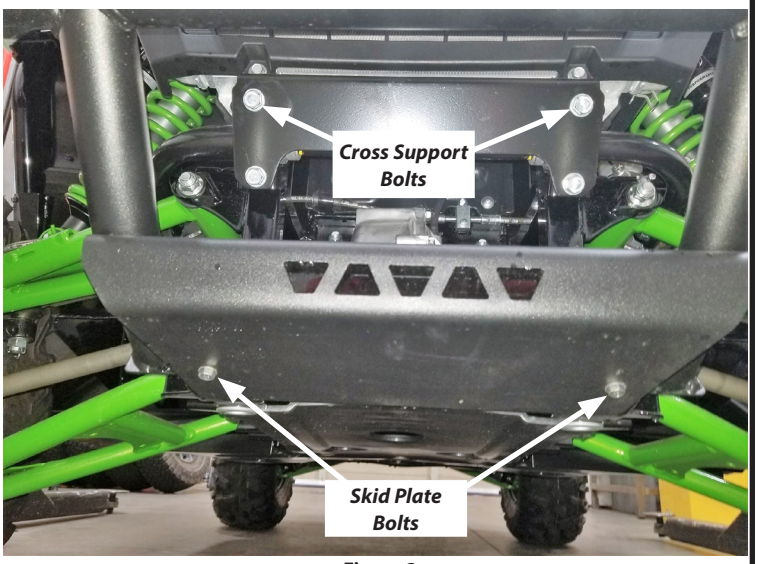

Figure 2

3. Remove bumper by removing the upper and lower hex head bolts (both sides).

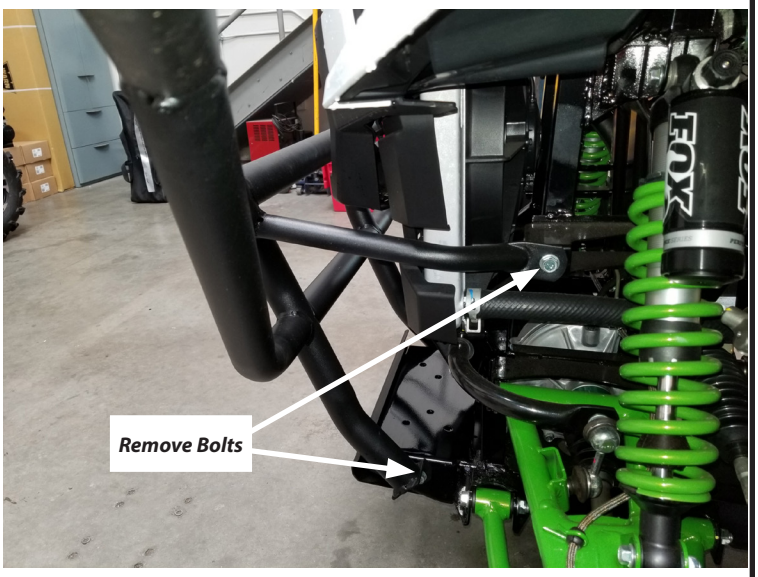

Figure 3

4. Install the fairlead to the winch mounting plate (A1) using the hardware provided in your winch kit.

Figure 1

5. Before you mount the winch to the mounting plate, install the mounting bracket bolts (B3). This will aid in installation later.

6. Thread locknuts (B4) slightly on bolts. ***Do not tighten. This is to only hold bolts in place at this time. You will remove locknuts once you install the winch to the plate.***

7. Install the winch using hardware provided in the winch kit.

8. Remove the locknuts.

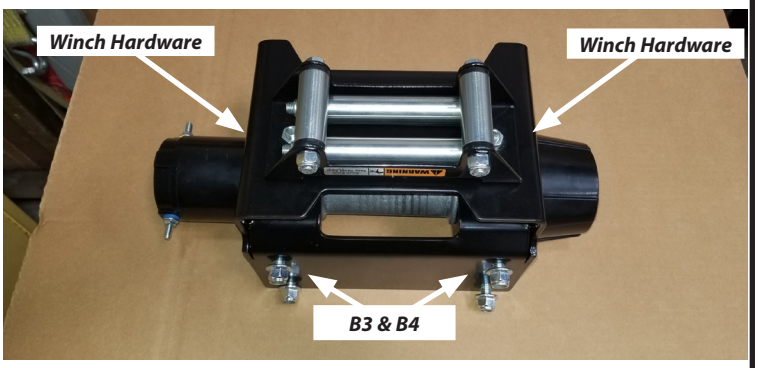

Figure 2

9. Place the mounting bracket and winch assembly in place. ***NOTE: Remember, the bolts should be hanging down underneath the bracket.***

   a. Slightly roll the top of the mounting bracket towards the vehicle.

   b. Slide the mounting bracket towards the vehicle as the bolts drop through the holes provided in the vehicles mounting plate.

   c. Re-install the locknuts (B4) provided in your kit. Do not fully tighten.

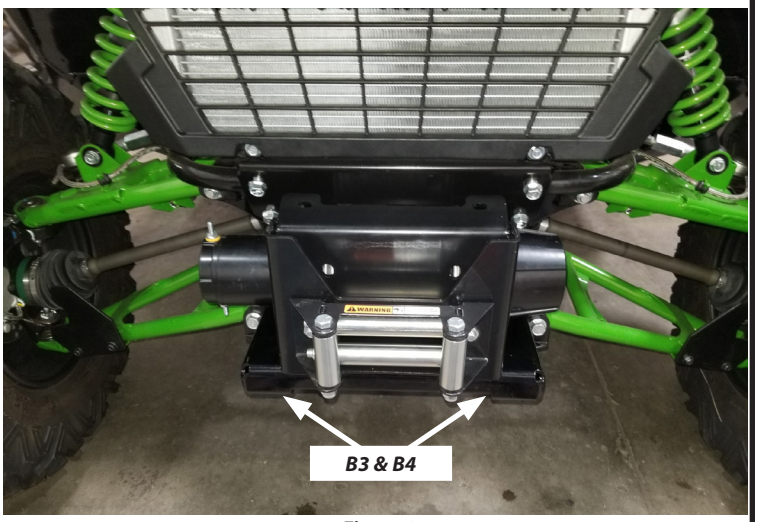

Figure 3

10. Install the winch mount support bracket (A2) and fasten to upper mounting holes (where you previously removed bolts) with flange bolts provided (B6).

    Attach the support bracket to the top of the winch mounting plate using hardware provided (B5, B2 and B1).

11. Reinstall bumper.

12. Reinstall skid plate.
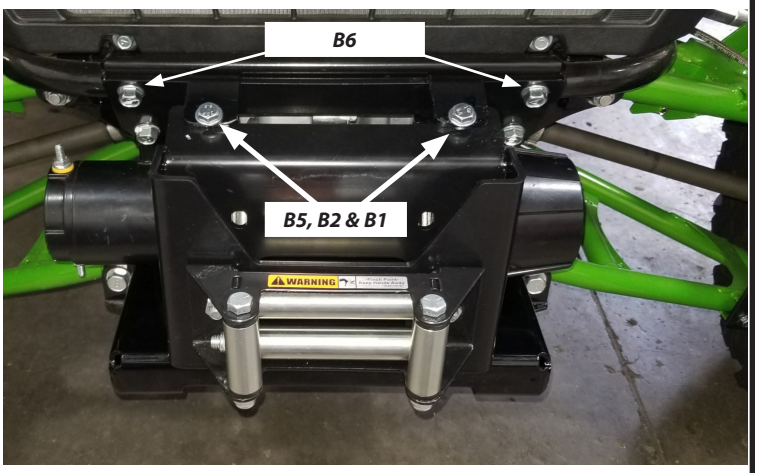
You installation is now complete.