INSTALLATION INSTRUCTIONS

FRONT BUMPER

Part Number: 101698

Application: Honda Pioneer 700

GENERAL SAFETY PRECAUTIONS

Your safety, and the safety of others, is very important. To help you make informed decisions about safety, we have provided installation and operating instructions and other information on labels and in this guide. This information alerts you to potential hazards that could hurt you or others. It is not possible to warn you about all potential hazards associated with this product, you must use your own good judgment.

CARELESS INSTALLATION AND OPERATION CAN RESULT IN SERIOUS INJURY OR EQUIPMENT DAMAGE. READ AND UNDERSTAND ALL SAFETY PRECAUTIONS AND OPERATING INSTRUCTIONS BEFORE INSTALLING AND OPERATING THIS PRODUCT.

This guide identifies potential hazards and has important safety messages that help you and others avoid personal injury or death. WARNING and CAUTION are signal words that identify the level of hazard. These signal words mean:

⚠WARNING signals a hazard that could cause serious injury or death, if you do not follow recommendations. ⚠CAUTION signals a hazard that may cause minor to moderate injury, if you do not follow recommendations.

This guide uses NOTICE to call attention to important mechanical information, and Note: to emphasize general information worthy of special attention.

⚠ WARNING

IMPACT AND MOVING PARTS ENTANGLEMENT HAZARD

Failure to observe these instructions could lead to severe injury or death

- **Always** take time to fully read the Instructions and/or Operations Guide, and/or Basic Guide to Winching Techniques, in order to understand your winch and its operations.
- **Always** use extreme caution when drilling on any vehicle. Make sure that all fuel lines, brake lines, electrical wires, and other objects are not punctured or damaged when/if drilling on the vehicle. Thoroughly inspect the area to be drilled (on both sides of material) prior to drilling, and relocate any objects that may be damaged. Failure to inspect the area to be drilled may result in vehicle damage, electrical shock, fire or personal injury.
- **Always** wear safety glasses when installing this kit. A drilling operation will cause flying metal chips. Flying chips can cause eye injury.
- **Always** use extreme caution when cutting and trimming during fitting.
- **Always** remove jewelry and wear eye protection.
- **Never** lean over battery while making connections.
- **Never** route electrical cables:
  - Across any sharp edges.
  - Through or near moving parts.
  - Near parts that become hot.
- **Always** insulate and protect all exposed wiring and electrical terminals.
- **Always** install terminal boots as directed in installation instructions.
- **Always** use appropriate and adequate care in lifting components into place.
- **Always** insure components will remain secure during installation and operation.
- **Always** tighten all nuts and bolts securely, per the installation instructions.
- **Always** perform regular inspections and maintenance on the plow mechanism, fasteners, cable and related hardware.
- **Always** replace all worn or damaged parts before operating.
- **Never** operate this WARN product with damaged or missing parts.

Read installation and operating instructions thoroughly.

WARN INDUSTRIES, INC. 12900 S.E. Capps Road,
Clackamas, OR USA 97015-8903, 1-503-722-1200, FAX: 1-503-722-3000
Customer Service: 1-800-543-9276
Dealer Locator Service: 1-800-910-1122
International Fax: 1-503-722-3005

©2016 Warn Industries, Inc. WARN® and the WARN logo are trademarks of Warn Industries Inc.

⚠ CAUTION

MOVING PARTS ENTANGLEMENT HAZARD

Failure to observe these instructions could lead to minor or moderate injury

- **Always** take time to fully read and understand the installation and Operations Guide included with this product.
- **Never** operate this product if you are under 16 years of age.
- **Never** operate this product when under the influence of drugs, alcohol or medications.

Read installation and operating instructions thoroughly.

NOTICE

EQUIPMENT DAMAGE

- **Never** tow vehicle by attaching a tow bar to the eyelets on the bumper.
- **Never** attach tow bars directly to the bumper. Damage to bumper may occur. WARN bumpers are not designed to be used for flat towing. Consult with the manufacturer of your tow bar system for the proper vehicle tow bar brackets..

Read installation and operating instructions thoroughly.

TABLE OF CONTENTS

Tools Required....page 2
Torque Specifications....page 2
Parts List....page 3
Installation....page 4-6
Maintenance/Care....page 6

TOOLS REQUIRED

- Standard and Metric wrenches
- Standard and Metric sockets

TORQUE SPECIFICATIONS

Please use the recommended torque specifications when assembling this product unless otherwise specified in the instructions.

FASTENER SIZE	*FASTENER TORQUE*		*FASTENER SIZE*	*FASTENER TORQUE*	
	lb-ft	*(N.m)*		*lb-ft*	*(N.m)*
1/4"	*8*	*(11)*	*M4*	*(2)*	*3*
5/16"	*17*	*(23)*	*M5*	*(4.5)*	*6*
3/8"	*30*	*(40)*	*M6*	*(7.5)*	*10*
7/16"	*48*	*(66)*	*M8*	*(18)*	*25*
1/2"	*74*	*(100)*	*M10*	*(37)*	*50*
9/16"	*106*	*(144)*			
5/8"	*148*	*(200)*			
3/4"	*269*	*(364)*			

©2016 Warn Industries, Inc. WARN® and the WARN logo are trademarks of Warn Industries Inc.

PARTS LIST

ITEM	PART NUMBER	DESCRIPTION	QTY	ITEM	PART NUMBER	DESCRIPTION	QTY
A1	102260	BUMPER	1	B1	93104	M8 HEX BOLT	9
A2	102270	LOWER SUPPORT BRACKET	1	B2	66129	M8 HEX FLANGE NUT	5
A3	102526	LIGHT BRACKET	1	B3	89084	M8 FLANGEHEX BOLT	2
A4	102229	FAIRLEAD PLATE	1	B4	71588	M8 NYLOCK NUT	6
A5	102795	BRACKET U-CHANNEL	2	B5	28514	M12 HEX HEAD BOLT	2
A6	102796	PLATE FRAME WASHER	2	B6	79465	M12 HEX FLANGE NUT	2
				B7	3693	WASHER	2
				B8	13454	M8 HEX HEAD BOLT	4

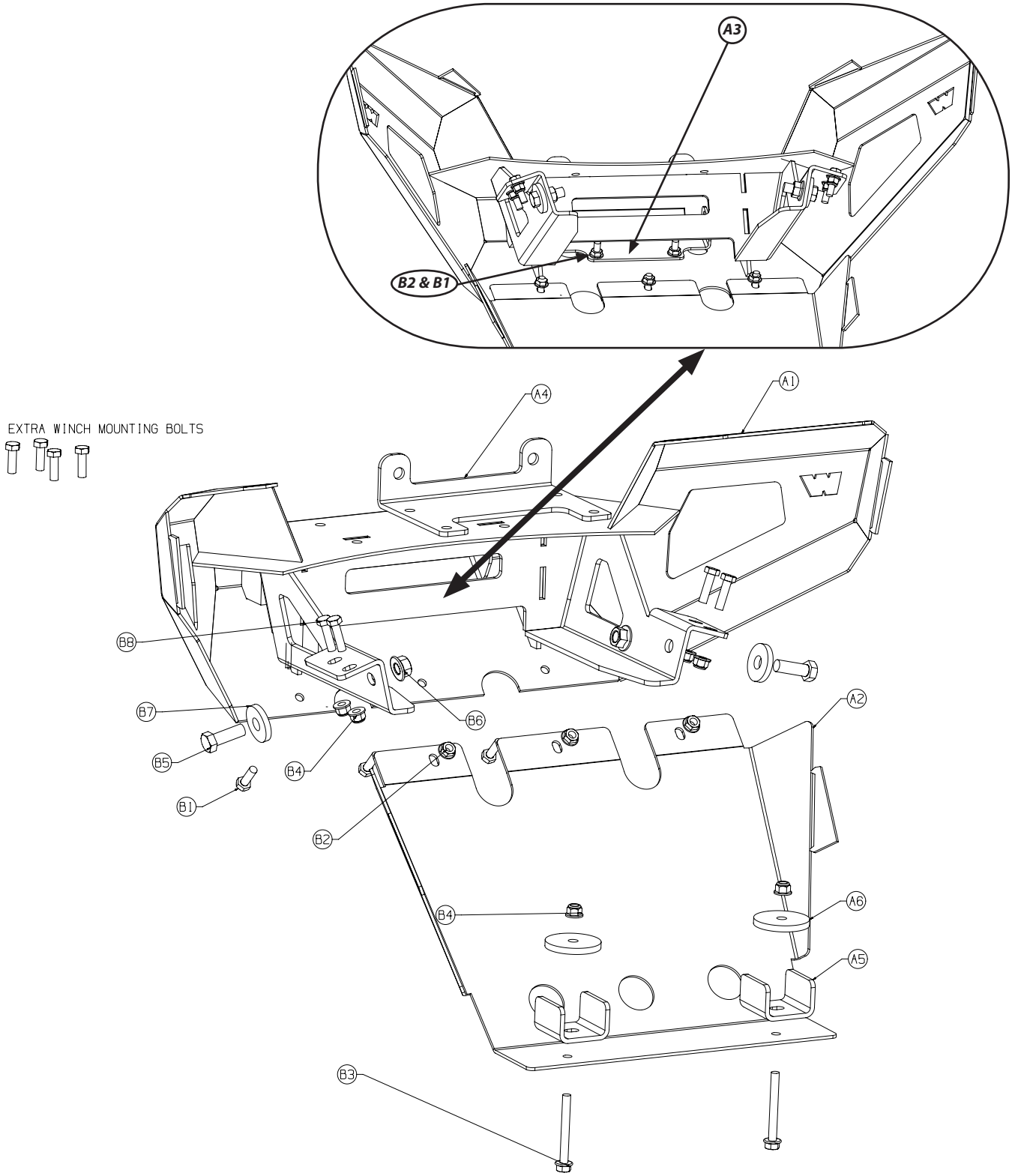

©2016 Warn Industries, Inc. WARN® and the WARN logo are trademarks of Warn Industries Inc.

1. Install light bracket (A3) using hardware (B1 and B2).

   NOTE: If you plan on installing a winch, wait to install light bracket. Skip to step 2 now.

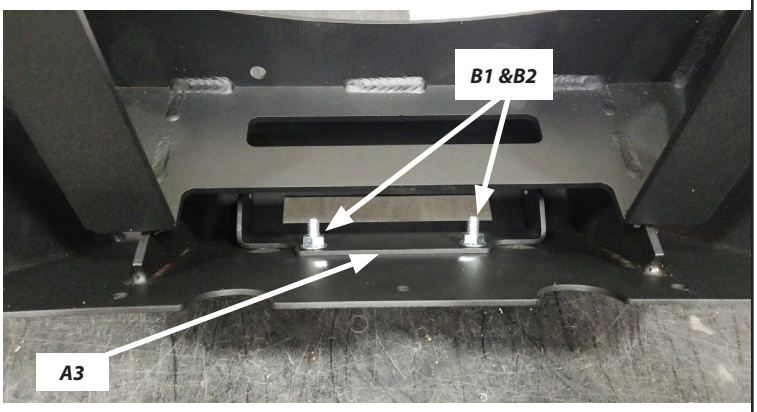

Figure 1

2. Remove stock bumper (three bolts and nuts - each side).

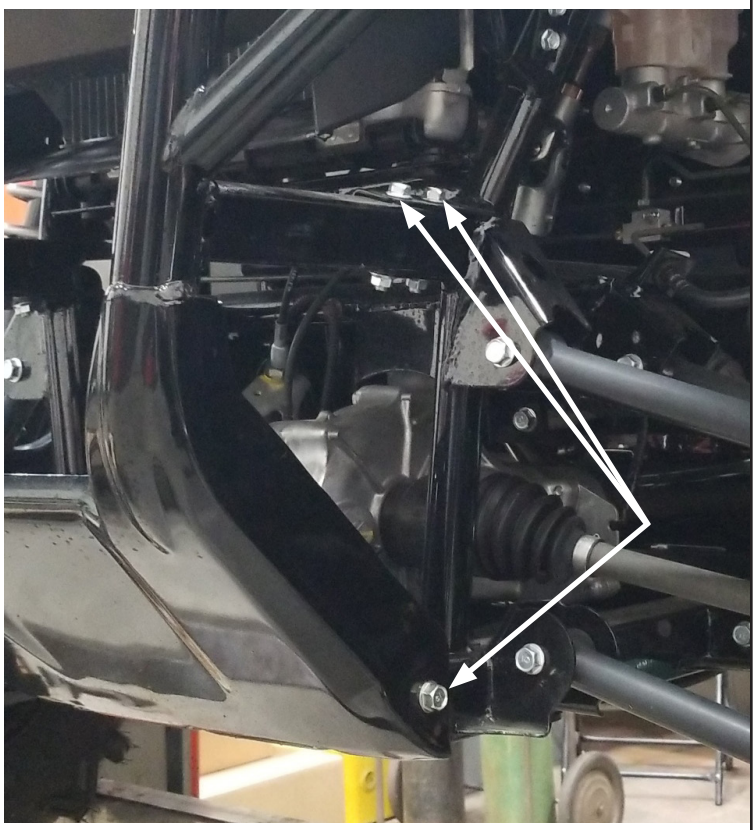

Figure 2

Figure 3

©2016 Warn Industries, Inc. WARN® and the WARN logo are trademarks of Warn Industries Inc.

3. Place new bumper on vehicle.

4. Secure bumper to vehicle with one M12 bolt (B5) with washer (B7) below and two M8 bolts (B8) and nylock nuts (B4) above.

5. Repeat for other side.

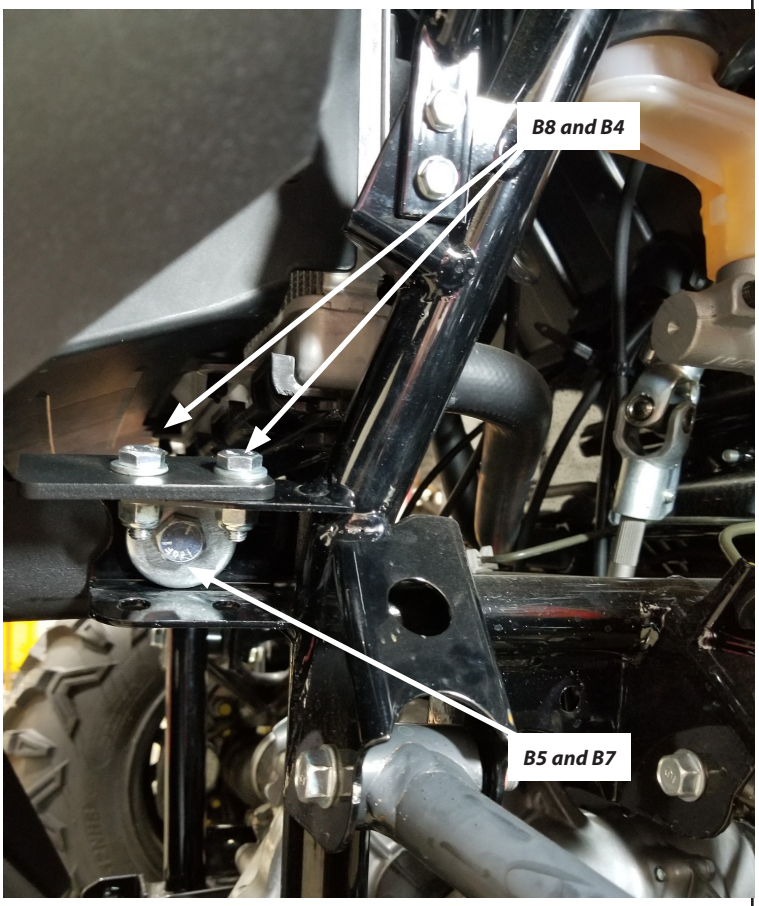

Figure 3

6. With assistance, hold skid plate in place and insert center bolt (B1) and flange nut (B2) to hold plate in place.

7. Install remaining two bolts and nuts.

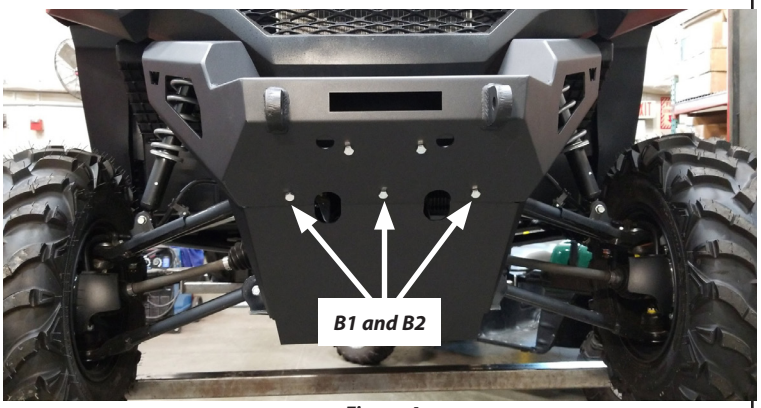

Figure 4

8. With help, install u-bracket (A5) and fender washer (A6), ***each side***.

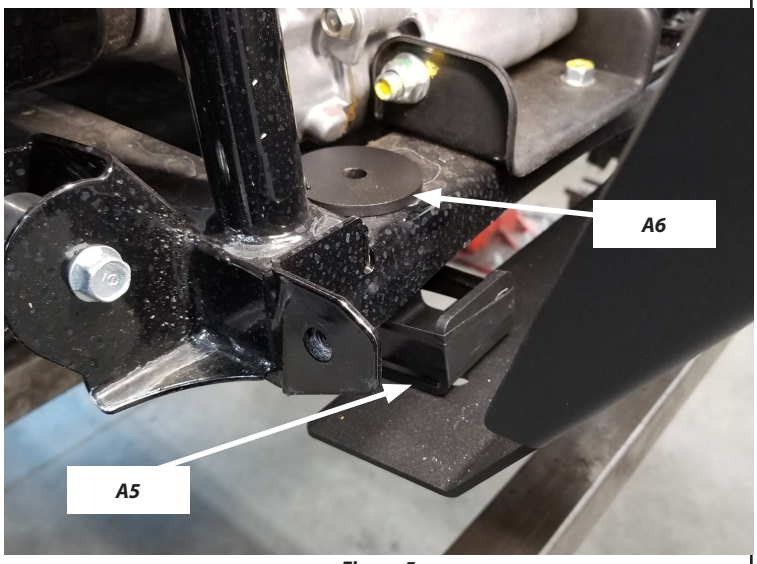

Figure 5

©2016 Warn Industries, Inc. WARN® and the WARN logo are trademarks of Warn Industries Inc.

9. Install bolt (B3) through skid plate. u-bracket, frame and skid plate. Secure with locking flange nut (B4).

10. Your installation is complete. ***If you are installing a winch, please continue to step 11.***

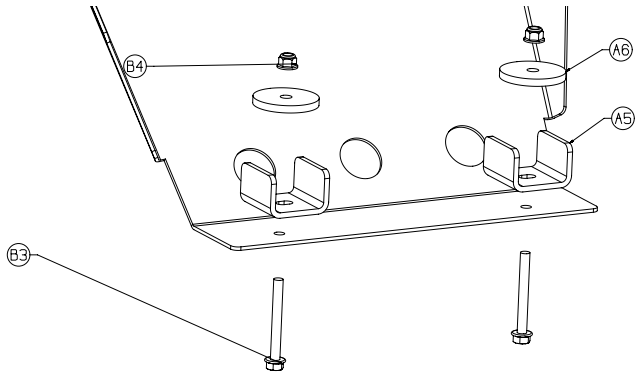

Figure 6

11. Install light bracket now (***you will reach through bumper side opening to place in mounting location***).

12. Install fairlead to fairlead bracket.

13. Carefully place fairlead bracket assembly on bumper.

Figure 7

14. Install and wire winch per winch installation instructions.

Figure 8

MAINTENANCE / CARE

1. Inspect all parts on the winch, winch mount, and related hardware prior to each use. Replace all hardware that appears rusted or deformed.

2. Inspect all nuts and bolts on the winch, winch mount and related hardware prior to each use. Tighten all nuts that appear to be loose. Stripped, fractured, or bent bolts or nuts need to be replaced.

3. Check all cables prior to use. Replace cables that look worn or frayed.

4. Check all moving or rotating parts. Remove debris that may inhibit the part from moving freely.

©2016 Warn Industries, Inc. WARN® and the WARN logo are trademarks of Warn Industries Inc.