DISCLAIMER: These installation guidelines are offered as a reflection of industry "reasonable practices" at the time it was produced but it is understood that reasonable practices change over time and it is the installers obligation to be trained and educated regarding what is current reasonable practice. Further the guidelines are intended to be strictly recommendations and are not to serve as a step-by-step, fail-safe installation checklist. Notwithstanding the forgoing, it is ultimately the installer's responsibility to assess each installation job and correctly install wheels and related accessories. The information contained in these Guidelines is believed to be reliable, but many factors can lead to installation concerns. Neither SEMA, WTC nor their affiliates are responsible for installation errors, or the information compiled for these Guidelines.

MAXIMUM LOAD RATING & MAXIMUM TIRE DIAMETER

The load rating of a wheel is determined by the wheel manufacturer and must never be exceeded. Manufacturers identify a wheel's maximum load rating, tire diameter, and maximum PSI. All this information is stamped on the back of the wheel. If the information is not on the wheel contact the wheel manufacturer before using the wheel.

If the load rating is not available, THE WHEEL SHOULD NOT BE USED ON THE VEHICLE.

Wheel load rating requirements are determined by dividing the vehicle's heaviest gross axle weight rating (G.A.W.R.) by 2. The axle weight rating for most vehicles is shown on the identification label located on the driver's side door jamb, gas tank door, trunk lid or glove compartment.

WARNING

EXCEEDING THE MAXIMUM LOAD RATING, MAXIMUM TIRE DIAMETER, OR MAXIMUM PSI OF THE WHEEL IS UNSAFE AND COULD CAUSE WHEEL FAILURE, RESULTING IN DAMAGE, SERIOUS INJURY OR DEATH.

WHEEL FIT CHECK

Before mounting tires perform a wheel fit check at each wheel mounting location using the following steps:

1. Remove front wheels from vehicle.
2. Clean and inspect all stud threads and mounting surfaces before installation.
3. Remove spring clip retainers (rotor clips), if applicable.
4. Hold the new wheel on the hub and be certain that the wheel is mounted flush to the mounting surface of the hub. The back side of the wheel must not rest or touch brake drum balancing weights, any brake caliper, suspension component, rivets, or obstructions. Removing drum balancing weights to solve wheel fitment problems can result in vehicle vibration not remedied by an off-the-car wheel balancer.

POSSIBLE OBSTRUCTIONS:

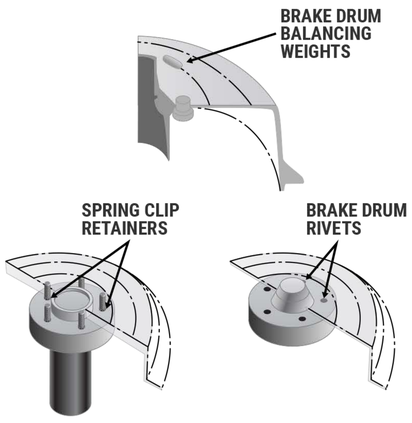

WARNING

SPRING CLIP RETAINERS ARE OFTEN OVERLOOKED AND MUST BE REMOVED. If clips or other obstructions are not removed, they will not let the wheel sit flush against the mounting surface. This may result in an improper installation depending on the wheel configuration. Some vehicle manufacturers do not use spring clip retainers and use nuts that hold the brake assembly together. DO NOT REMOVE THESE NUTS.

5. Install three fasteners finger tight and rotate the wheel to check caliper and suspension clearance and to find bent flanges or axles.
6. Perform the same check for the remaining three wheels on the vehicle, starting in the rear.
7. Verify that you have at least 7 full turns on the fastener to allow for proper thread engagement.

WARNING

Never modify the wheel. Spacers and adapters do not resolve fitment problems. Modification of the wheel or the use of spacers or adapters to resolve clearance or fitment problems could result in an unsafe condition.

BEFORE INSTALLATION, MAKE SURE YOU HAVE THE CORRECT FASTENERS, WHEEL LOCKS AND CENTER CAPS DESIGNED SPECIFICALLY FOR THE WHEEL AND APPLICATION.

CENTER CAPS: The two basic types of center caps are either inserted from the back of the wheel or attached from the front. For the type inserted from the back, always make sure the flange of the cap matches the wheel's chamfer and is below the mounting surface of the wheel. If the flange of the cap protrudes beyond the mounting surface of the wheel, it will not let the wheel seat properly. If this happens, it may result in an improper installation depending on the wheel configuration.

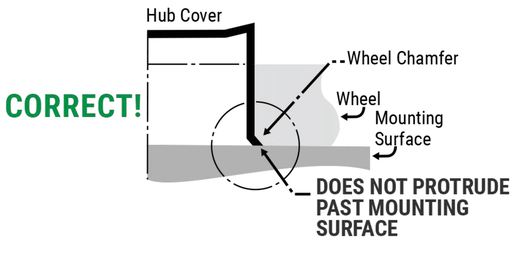

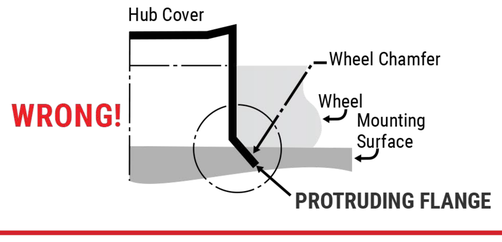

TIRES

WARNING

WHEELS AND TIRES ARE MARKED WITH THEIR SIZES. THE WHEEL AND TIRE MUST MATCH BEFORE MOUNTING.

1. The tire may be labeled with a color dot (painted mark or label, usually red, yellow, or white) that indicates the heavy spot or high spot of the tire. This should be aligned with the wheel's low-runout spot, which may be identified with a small notch, color dot or valve stem. Since labeling approaches vary, check with the wheel manufacturer's instructions for low-spot identification.
2. The MAXIMUM PSI and MAXIMUM LOAD of the tire should not exceed the wheels MAXIMUM PSI or MAXIMUM LOAD.

TIRE / WHEEL APPLICATION RULES

The following procedures must be followed:

1. Correct load carrying capacity (The new tire must carry the same load as the O.E. tire at the vehicle placard pressure)
2. Tires installed on the correct rim width Rim widths are found on tire labels or from tire manufacturer.
3. Check for proper tire/wheel clearance (tire or wheel must not contact the fenders or suspension parts)
4. Adjust the PSI of the tire sold (if not O.E.). The load inflation tables are available from the Tire Manufacturers.
5. Educate the customer on the changes made to their vehicle.

HUB CENTERING RINGS

Hub rings are used to center the wheel onto the vehicle which can prevent

vibrations from occurring. Hub rings are not load bearing.

Prior to installing hub centering rings be sure to check the following:

1. Verify that the inside diameter of the ring is correct by first placing the ring on the vehicle hub and pushing it on the hub until it touches the hub mounting surface of the vehicle. A good fit is one where the ring is snug against the diameter of the hub and flush against the mounting surface of the vehicle.
2. Verify that the centering ring fits correctly onto the wheel. A good fit is when the ring can be easily pushed by hand through the center hole of the wheel and the ring is snug against the walls of the center hole. When fully pushed in, the surface of the hub ring must be flush with or just slightly below the mounting surface of the wheel. The hub ring must not protrude beyond the mounting surface of the wheel.
3. To install the centering ring, place the ring into the center hole on the backside of the wheel and mount to the vehicle.

WHEEL INSTALLATION

Clean and inspect all stud threads and mounting surfaces before installation. Threads must not be lubricated, and must be free of corrosion, rust, burrs, chips, excessive deformation, fractures, and damage. Replace if any corrosion, stripping, damage, or fractures are found. Always use new fasteners (lug nuts or lug bolts) when installing new wheels.

1. Be certain the fasteners are correct for the application. They must match the thread diameter, pitch and seat; otherwise, the installation will be improper, and may result in damage or a dangerous condition. "Thread diameter" refers to the diameter of the stud measured at the outer edges of the threads. "Thread pitch" for non-metric applications refers to the number of threads per inch; for metric applications, it is the distance between the threads in millimeters. The "seat" means the area on the wheel where the fastener contacts the wheel.

The basic types of seats are conical (60° taper "acorn" and "bulge") with or without extended thread, mag, and spherical or ball. Shown below is a drawing of each type in its proper application.

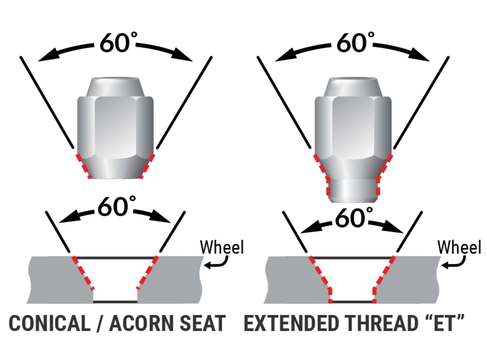

WARNING

ONLY USE THE TYPE OF FASTENER COMPATIBLE WITH THE TYPE OF SEAT ON THE WHEEL. The different seat types are not compatible and, if installed incorrectly, the fastener may loosen, possibly resulting in wheel loss.

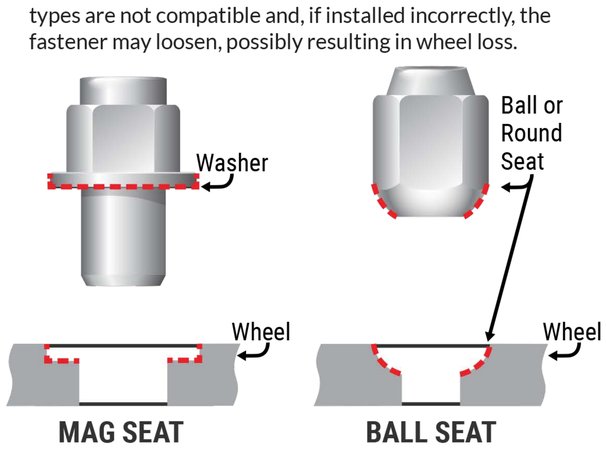

2. Check thread engagement. Every stud or bolt must be long enough to thread a length at least 70% of the stud or bolt diameter. For example, a 1/2"-20 lug nut must engage the stud with at least 7 full turns. Check for this problem on every stud; some may be different lengths. IF YOU DO NOT HAVE PROPER THREAD ENGAGEMENT, DO NOT INSTALL WHEELS.

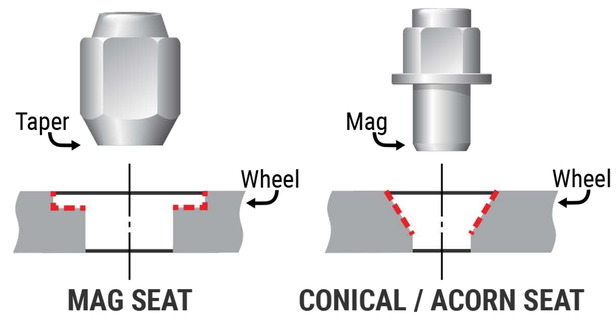

WRONG!

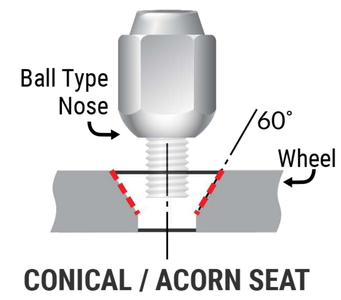

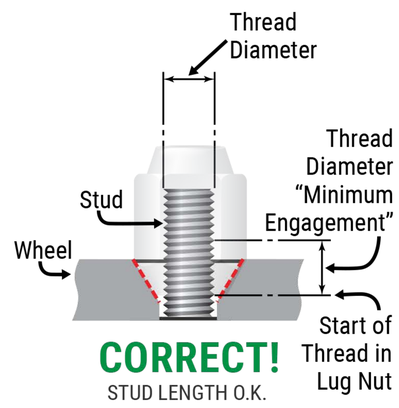

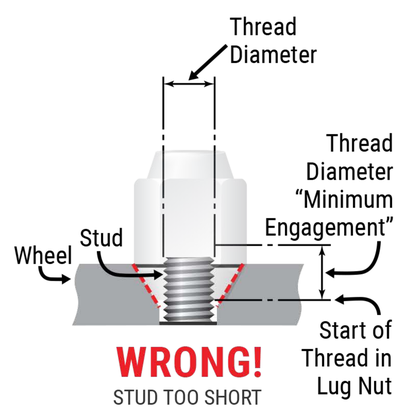

WARNING

3. Do not allow a lug nut to bottom out on the stud or a shank or lug bolt to bottom out on the mounting surface. This is extremely dangerous and unsafe because the fastener is not in contact with the wheel or has insufficient contact. Check for these problems on every stud on a hub as some may have different lengths. IF YOU FIND A PROBLEM; DO NOT INSTALL WHEELS.

STUD BOTTOMING OUT IN LUG NUT

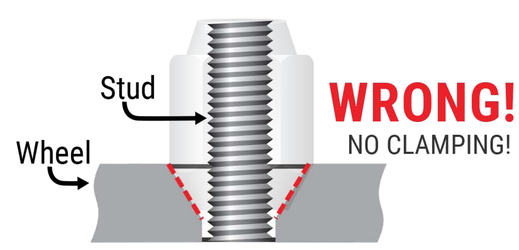

SHANK OR BOLT CONTACTING MOUNTING SURFACE

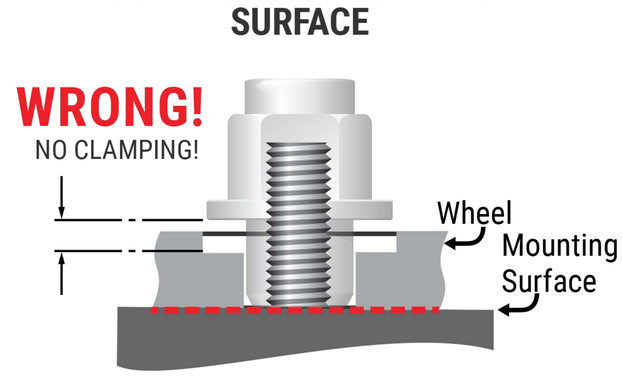

WARNING

4. Never use fewer fasteners than the vehicle was designed for. If the vehicle has 5 studs or lug bolt holes, then use 5 fasteners.
5. During installation, gravity causes the wheel to rest upon the highest stud. If the wheel is installed off-center, it can be dangerous and damaging to your wheels and tires over time. Do not allow the wheel to "hang" on the studs during the initial tightening; make certain the wheel is centered and supported prior to tightening fasteners. Fasteners must be tightened in a star or crisscross pattern to ensure uniform lug nut pressure and alignment. Apply torque evenly by repeating the star or crisscross pattern until desired torque is reached.

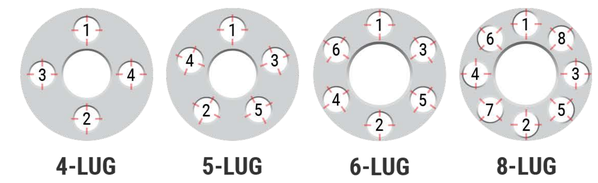

WARNING

6. A CALIBRATED TORQUE DEVICE MUST BE USED TO ACHIEVE PROPER TORQUE SPECIFICATIONS.
7. Use Original Equipment Manufacturer's torque specification. If the torque specification is not specified in the vehicle owner's manual contact the vehicle manufacturer. If the vehicle manufacturer does not provide a specification, check with the aftermarket wheel manufacturer for a specification. If neither the vehicle manufacturer nor the wheel manufacturer gives you the specification, the following may serve as a guideline for passenger cars and light-trucks only:

STUD DIAMETER	TORQUE RANGE (FT/LBS.)
12mm	75 - 90
14mm	90 - 110
7/16"	70 - 80
1/2"	75 - 90
9/16"	105 - 115
5/8"	125 - 135

8. Check new fasteners against the vehicle wrench, making sure they are same size. If the new fasteners have a different hex size than the wrench provided with the vehicle, be sure to have (or advise the customer to have) with the vehicle a wrench matching the new fasteners being installed.
9. If the new fasteners have a different seat than the original equipment, make sure you keep enough of the original fasteners with the spare tire/tire changing equipment so if needed the spare tire can be mounted with the correct fasteners.
10. After approximately 100,000 vehicle miles, due to the wear of lug nut contact surfaces, it is recommended to inspect and if needed (when contact surfaces appear excessively worn) replace lug nuts.
11. After approximately 150,000 miles, due to the wear of lug nut-wheel contact surfaces, it is recommended to inspect and if needed replace lug nuts and wheels (when contact surfaces appear excessively worn), and studs (when threads appear damaged or deformed). This applies even if the lug nuts were already replaced at approximately 100,000.

MULTI-PIECE WHEELS

1. Multi-piece wheels require extra care when mounting tires. These wheels may have a special silicone sealant between the rims and the centers. This seal must not be touched with any tire mounting tools. If a tool contacts this area, the seal may be damaged and cause a leak.
2. When the tire valve is close to the seal, use caution in installing and removing the valve to prevent damage to the seal.
3. DO NOT TIGHTEN WHEEL ASSEMBLY BOLTS. They should be torqued at the wheel factory to manufacturer's specifications. If any appear loose, contact the wheel manufacturer for instructions.

AFTER INSTALLATION

WARNING

Be aware of or advise the customer of the following:

1. Follow Vehicle Manufacturers guidelines when a wheel/tire is removed and installed.
2. Write the specified torque requirement on the owner's wheel documents and review the complete instructions.
3. Keep the wheel documents with the vehicle owner's manual. When the vehicle is sold, both should be given to the new owner.
4. If wheel locks were installed, keep the key in a secure location and learn how to obtain replacement/ additional keys.
5. Clean tires and wheels (see wheel maintenance information).
6. Customers should review the safety checklist provided on the wheel owner's manual.

TPMS SYSTEMS

1. These systems are considered a safety device and should not be disabled or removed.
   a. If it arrives functioning, it should leave functioning.
   b. Indirect systems: use the difference of revolutions of tires to determine loss of pressure.
2. **Direct systems:** Use sensors inside the tire to measure actual psi.
   a. **Valve mounted sensors:** Are aluminum Bolt-in or Rubber snap in valves that the sensor is attached to.
   b. **Banded sensors:** Are fixed to a band in the drop-center of the wheel (180 degrees from valve).
3. **TPMS Service Tools**
   a. **Valve Tools**
      i. 40 in-lbs ¼ drive torque tool
      ii. 65 in-lbs ¼ drive torque tool
      iii. 11mm and 12mm socket thinwall
   b. **Sensor tools**
      i. 12 in-lbs T-10 torque tool
      ii. 35 in-lbs T-20 torque tool
      iii. Torx bit drivers T-10 and T-20.
4. Aluminum bolt in valves require a Rebuild kit of seal, valve core and Cap every time a tire is serviced.
5. Inspect for corrosion of aluminum valve stems as using a brass valve core can result in bi-metal corrosion and seize up requiring replacement.

INSTALLATION GUIDELINES COURTESY SEMA WHEEL, TIRE, SUSPENSION & BRAKE COUNCIL