800126, 800127

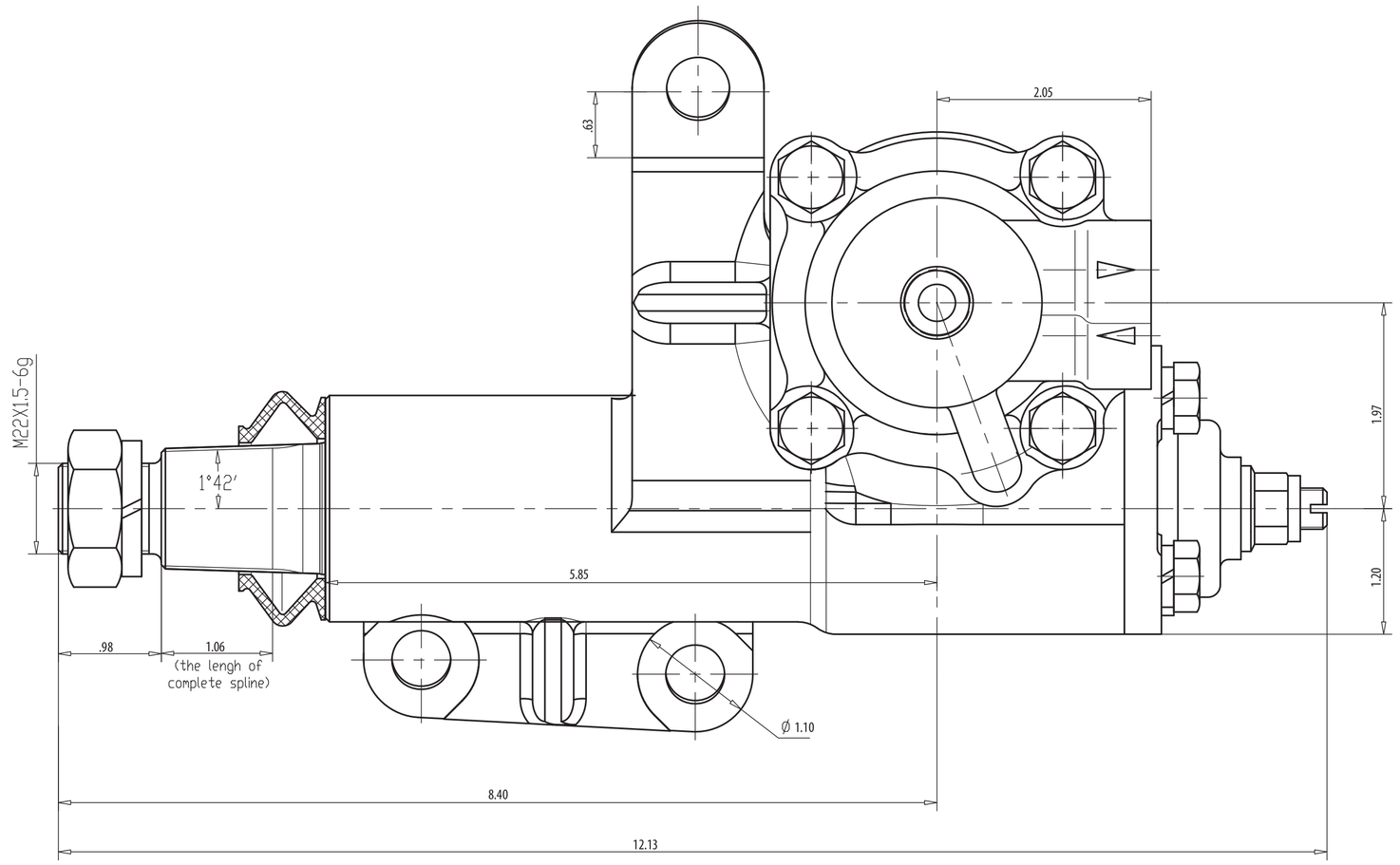

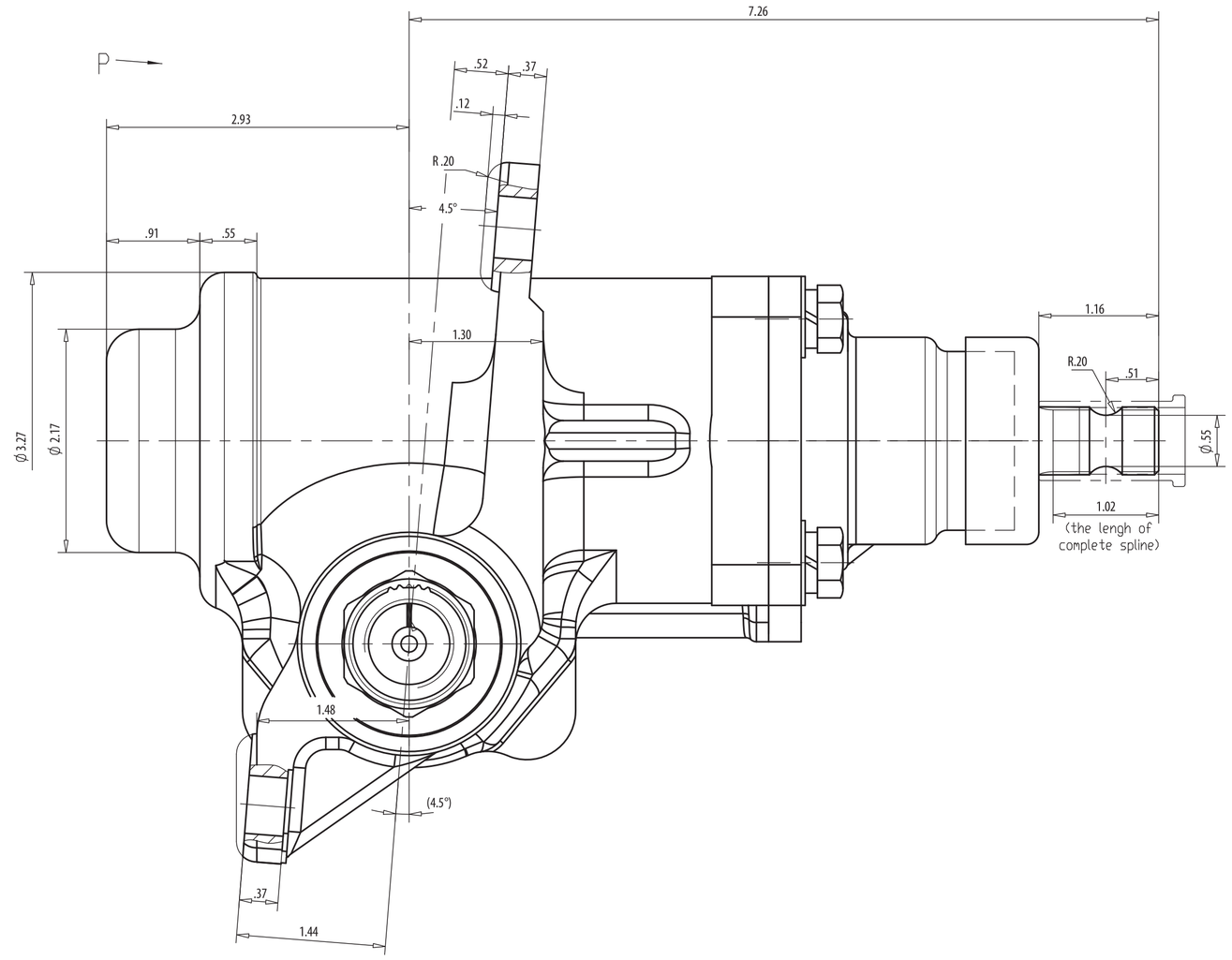

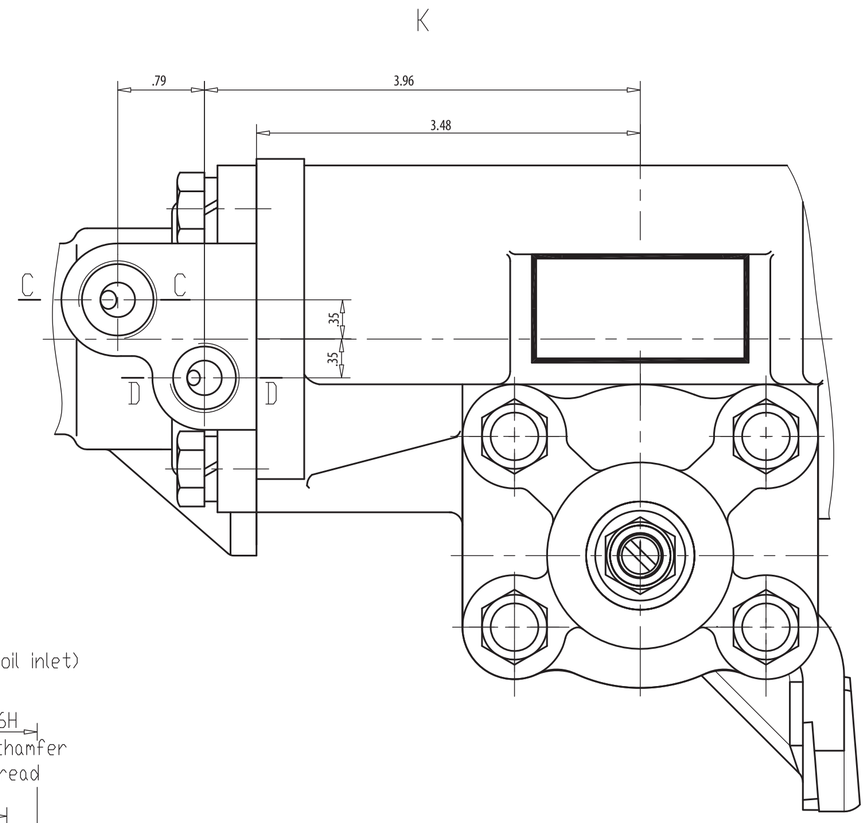

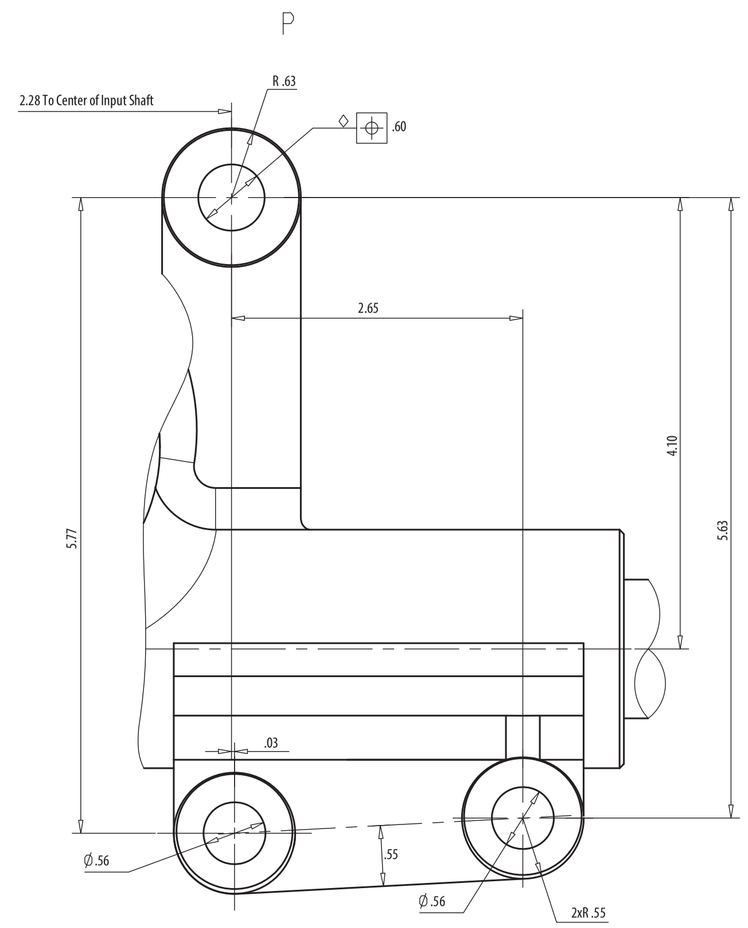

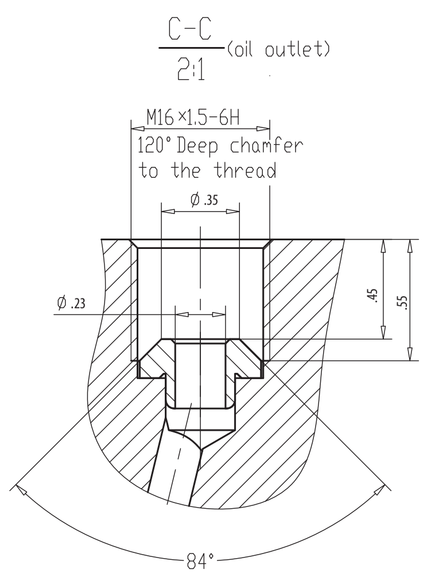

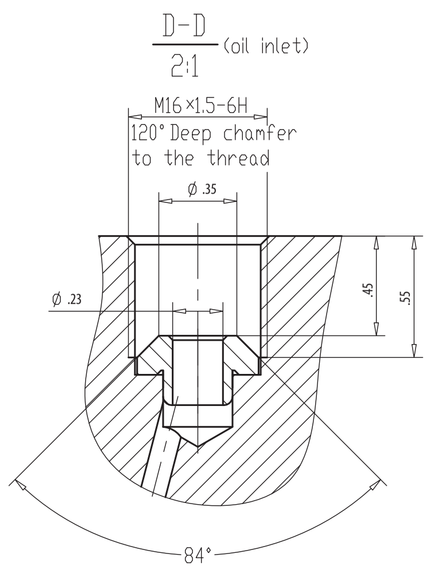

mark	number	file number	designing	date
designed by				
checked by				
audited by				
standard				
approved by				

Power steering gear install drawing

800126, 800127

pattern marking	category	quantity	weight	Ratio
		1		1:1

Total pages: page: