DOWNLOAD COLOR INSTALL MANUALS AT www.bddiesel.com

DO NOT USE WATER-BASED TRANSMISSION FLUSHING FLUID – THE LINING IN THE CONVERTOR CLUTCHES WILL DISINTIGRATE, RENDERING THE CONVERTOR USELESS AND *WARRANTY WILL BE VOIDED.*

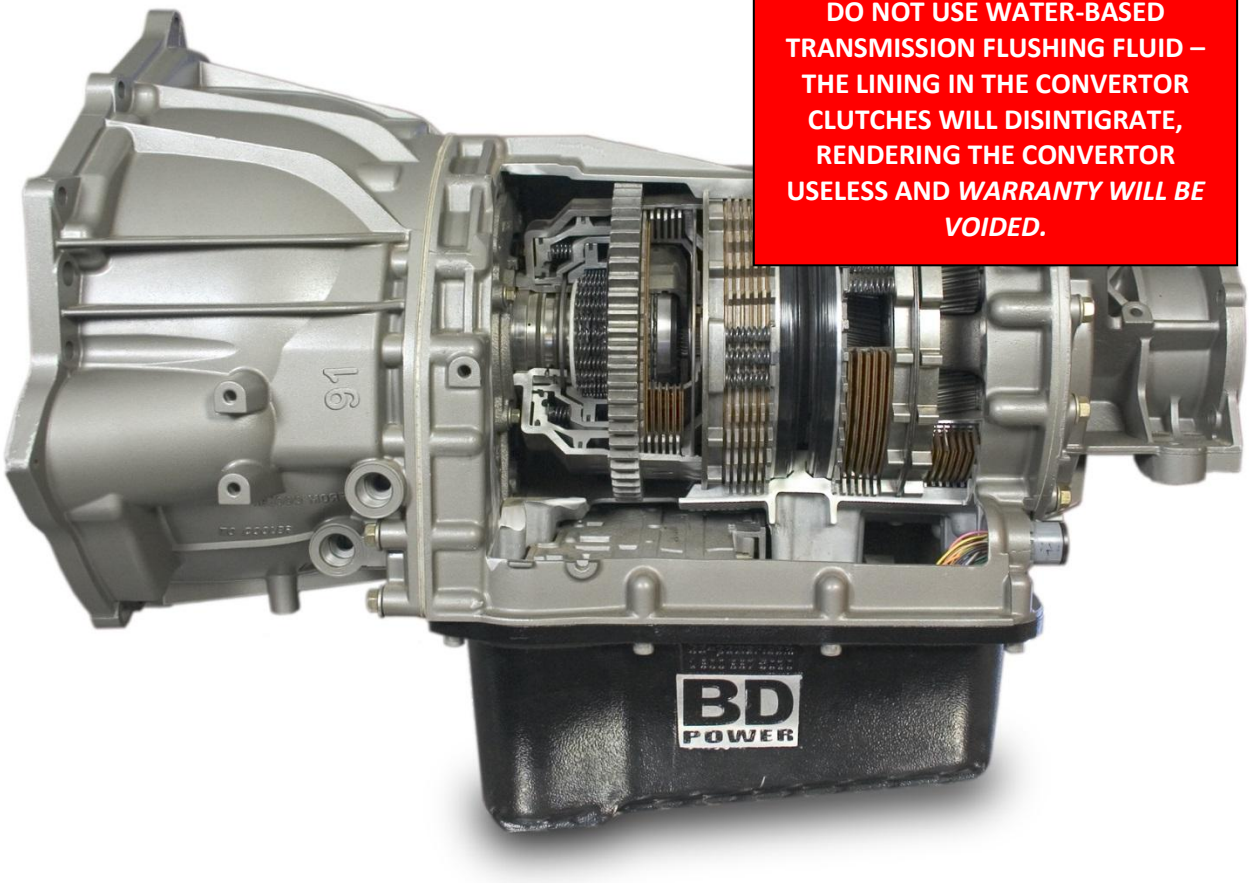

BD Performance Transmission

Allison 1000

Installation Instructions

1064744	2007.5-2010 LMM Duramax

PLEASE READ ALL INSTRUCTIONS BEFORE INSTALLATION

BD ENGINE BRAKE, INC.
Plant Address: 33541 MacLure Rd, Abbotsford, BC, Canada V2S 7W2
US Shipping Address: 1124 Fir Avenue, Blaine, WA 98230 | US Mailing Address: PO Box 231, Sumas, WA 98295
Phone: 1-800-887-5030 | Fax: 604-853-8749 | Internet: www.bddiesel.com

CONTENTS

SPECIALTY TOOLS 2
MAINTENANCE 2
REMOVAL 3
INSTALLATION 9
FLUID FILL CAPACITY 15
SPECIAL NOTES 15

SPECIALTY TOOLS

- GM tool #J 21366 Converter Holding Strap
- GM tool # J 44257 Connector Removal Tool

MAINTENANCE

BD recommends the first transmission oil and filter change to occur at the 3 month or 5000miles/8000km interval. This quick interval will not only give you piece of mind, but will also rid the transmission of any prior debris. After this OE service intervals are acceptable.

For fluid fill capacities, refer to section “FLUID FILL CAPACITY” on page 14.

REMOVAL

VEHICLE SHOULD BE SAFELY SECURED BEFORE INSTALLATION.

1. Disconnect both negative battery terminals.
2. Remove the transmission fluid level indicator.
3. Remove the starter motor.
4. Rotate the engine clockwise, using the crankshaft bolt in order to access the torque convertor bolts through the starter opening.
5. Remove the torque convertor bolts.
6. Completely raise the vehicle.
7. Drain the transmission fluids.

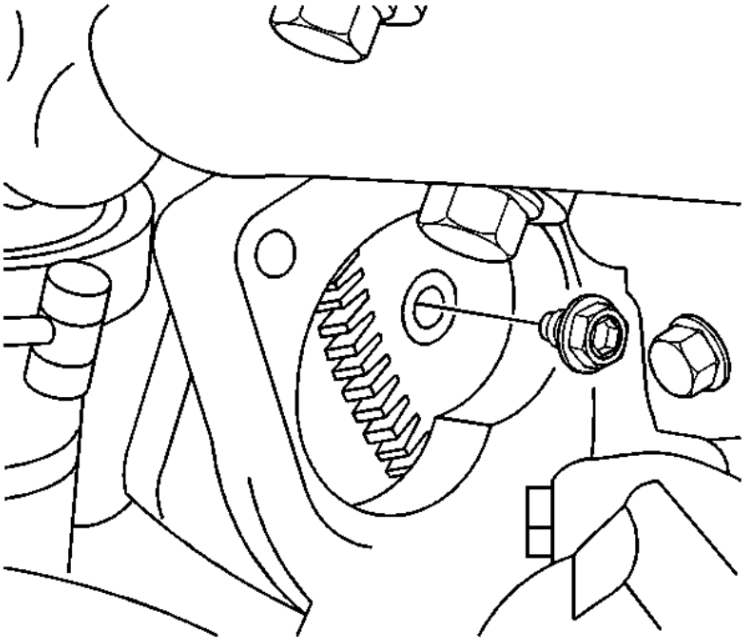

8. Remove the range selector cable heat shield bolts.
9. Remove the range selector cable heat shield.

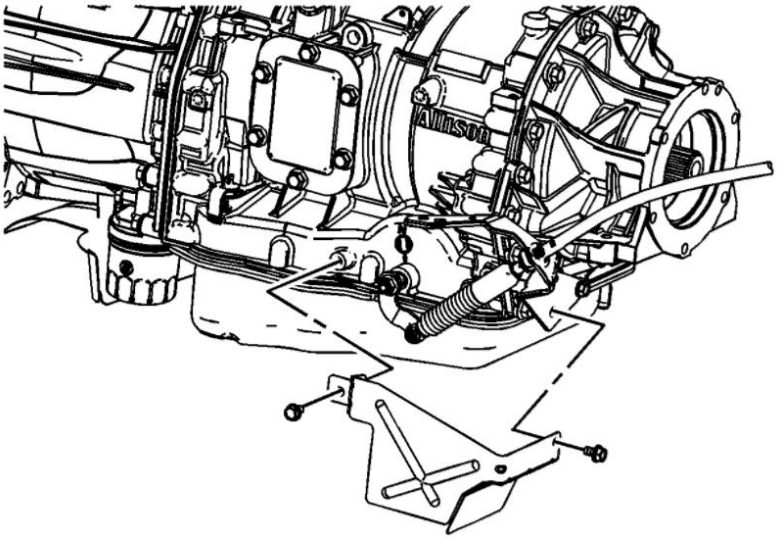

10. Remove the range selector cable end from the transmission range selector lever stud.	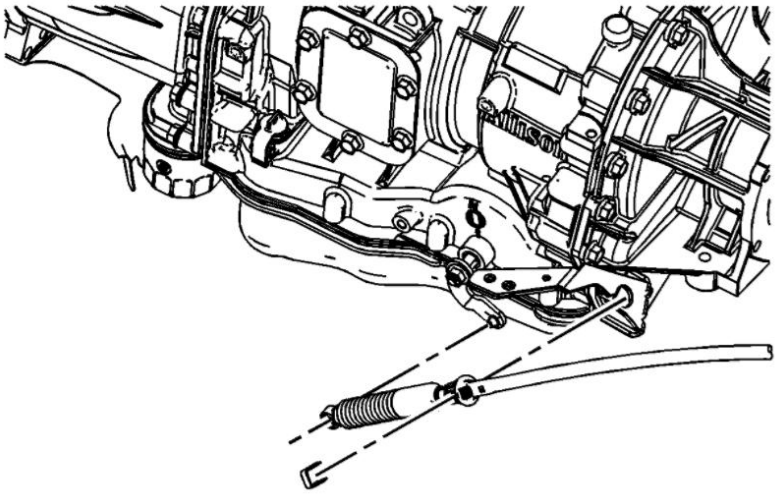
11. Remove the shift cable bracket bolts and bracket from the transmission. 12. Position the bracket with the cable attached out of the way.	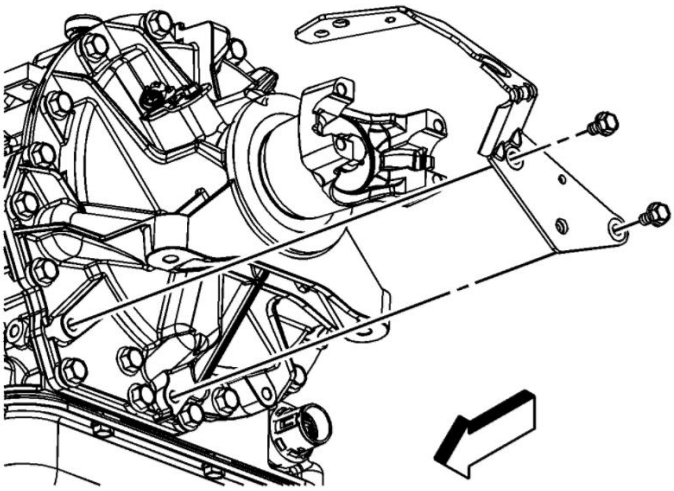
13. Remove the fuel line retainer bolts on the left side of the transmission.	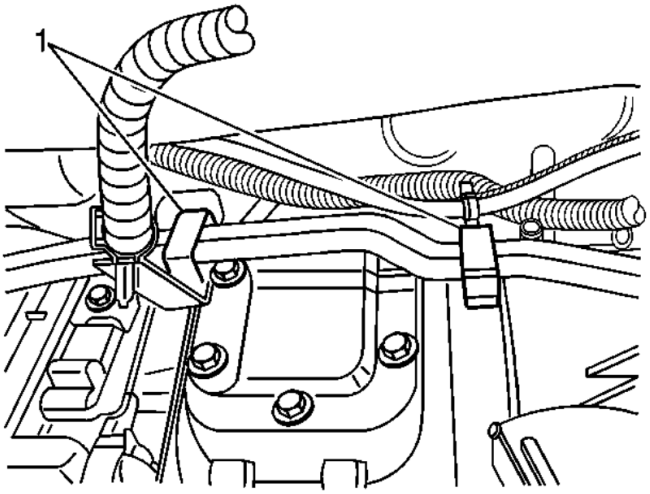

14. Remove the fuel line bracket nut from the converter housing stud.	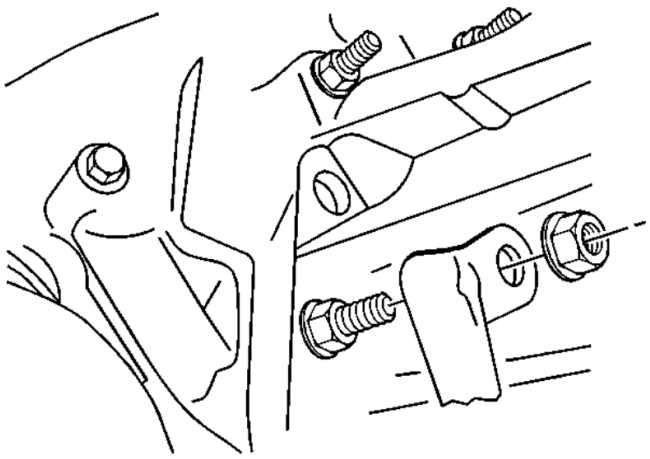
15. Disconnect the electrical connectors on the transmission and transfer case.	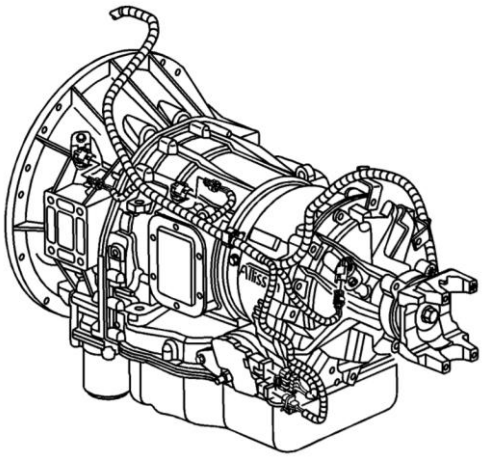
16. Disconnect the transmission main electrical connector. J 44257 tool may be used for ease. 17. Remove the transmission heat shield.	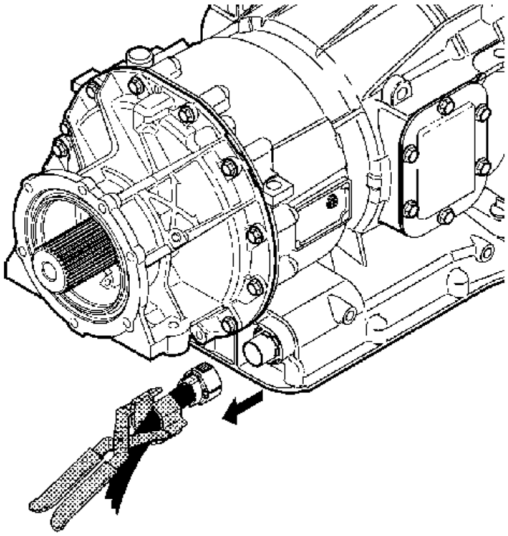

18. Remove the exhaust hanger bolts and reposition the hanger. 19. Support the transmission jack. 20. Remove the transfer case. 21. Reposition any wiring harness branches out of the way.	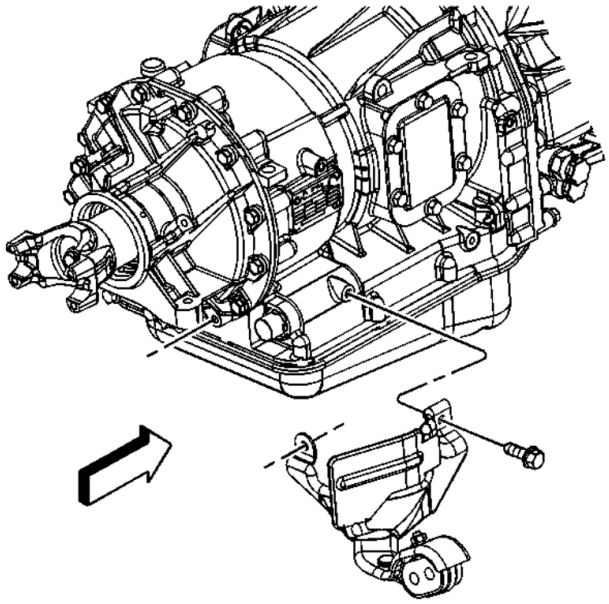
22. Secure a safety chain around the transmission. Use care not to overlap any wiring, fuel lines, or other related components.	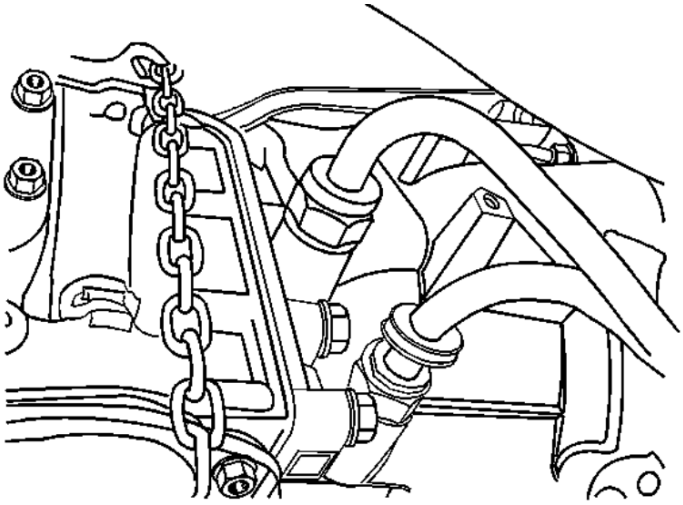
23. Disconnect the transmission oil cooler lines from the transmission. 24. Plug the transmission oil cooler line fittings in the transmission case if necessary. 25. If the vehicle is equipped with a PTO unit, disconnect and/or remove any necessary components to facilitate transmission removal.	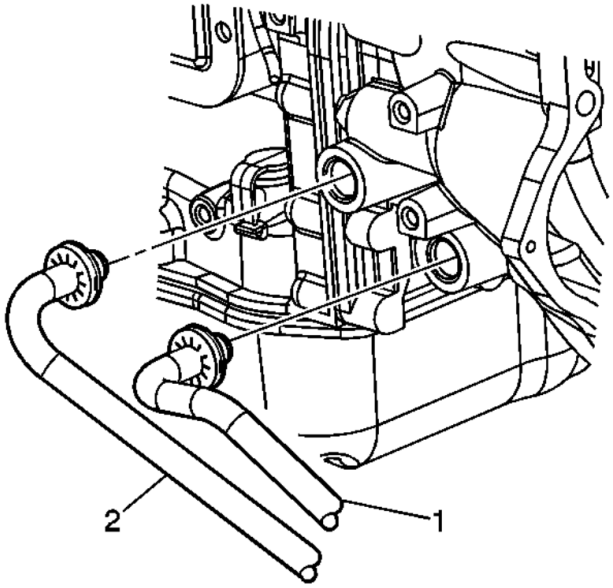

26. Remove the transmission fill tube but from the converter housing stud	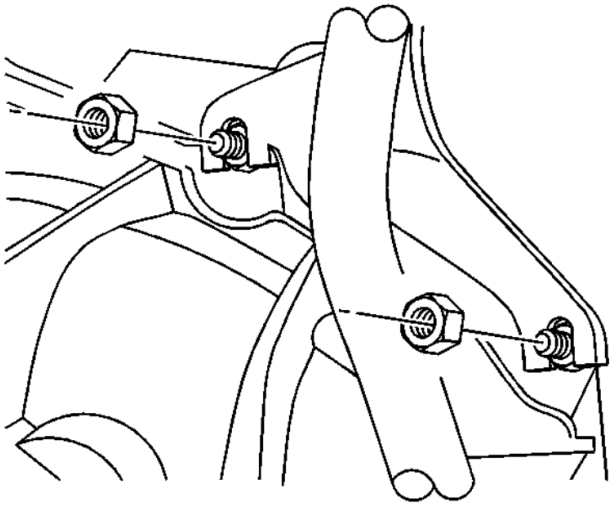
27. Remove the wire harness/vent tube bracket nut from the converter housing stud and reposition the bracket.	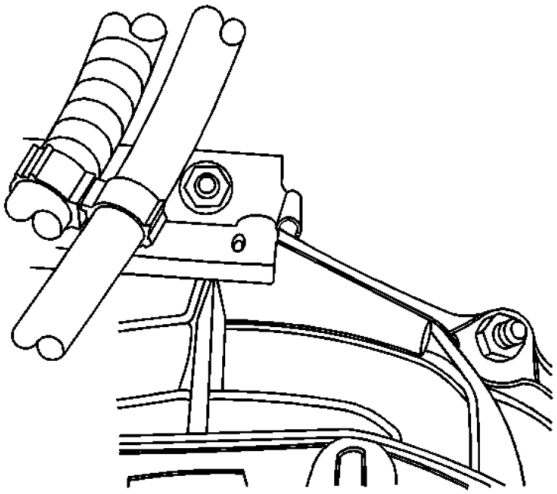
28. Remove the remaining converter housing bolts and studs. 29. Separate the transmission from the engine.	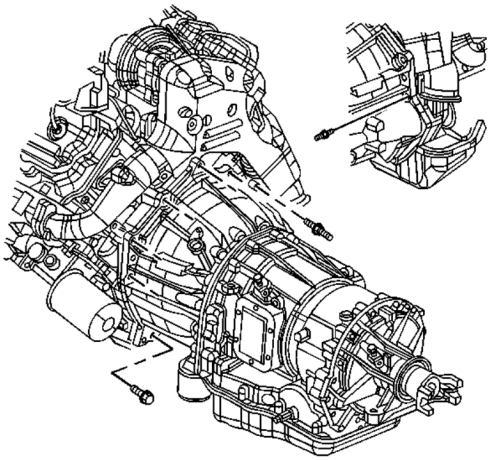

30. Install J 21366 strap to the convertor housing in order to keep the torque converter from sliding off the turbine shaft. 31. Carefully lower the transmission from the vehicle while simultaneously remove the fill tube. 32. Remove the J 21366 strap. 33. Flush and flow test the transmission oil cooler and lines.	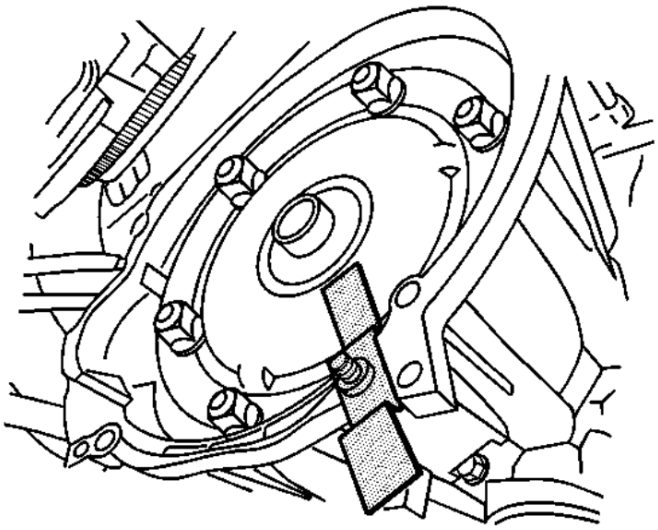

INSTALLATION

VEHICLE SHOULD BE SAFELY SECURED BEFORE INSTALLATION.

1. Install the J 21366 strap to the converter housing in order to keep torque converter from sliding off the turbine shaft.

   NOTE: When fully seated, the torque converter height from the bolt pad surface to the bell housing surface will be **0.92”** (just under 15/16”). The bell housing will be slightly protruding.

2. Raise the transmission into place while simultaneously installing the transmission fill tube.
3. Remove the J 21366 strap.

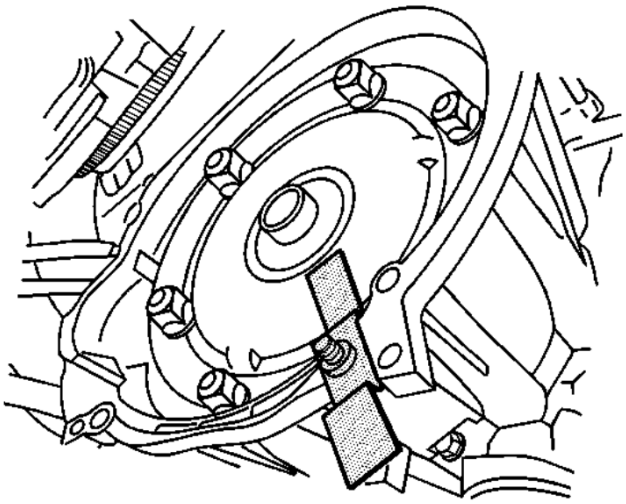

4. Align the transmission with the engine using the alignment dowels located at the rear of the engine.
5. Install the converter housing bolts and studs. Tighten the bolts/studs to 50Nm (37ftlb).

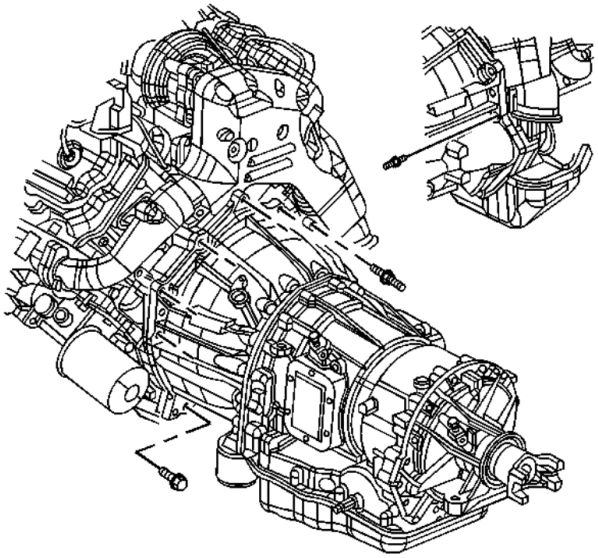

6. Install the wire harness/vent tube bracket and nut to the converter housing stud. Tighten the nut to 18Nm (13ftlb).	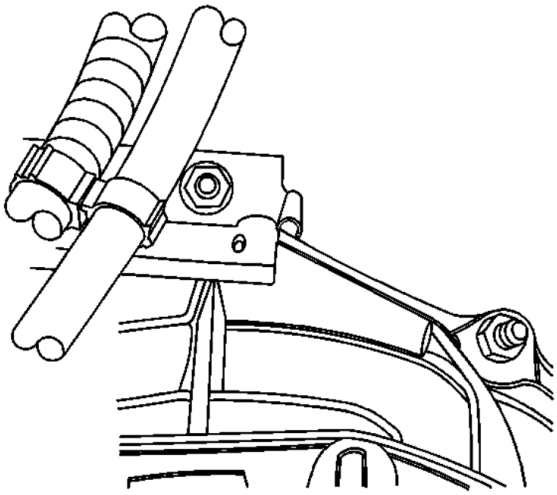
7. Install the transmission fill tube and nut to the converter housing stud. Tighten the nuts to 18Nm (13ftlb) 8. If the vehicle was equipped with a PTO unit, connect and/or install the components at this time.	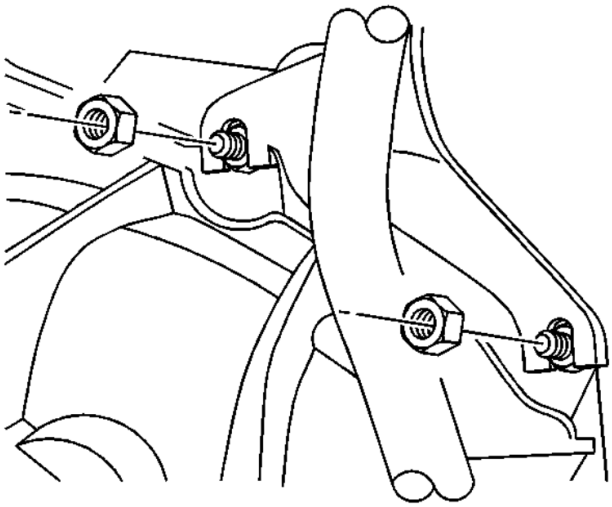
9. Remove the safety chain from around the transmission. 10. Install the transfer case, transmission support and propeller shafts.	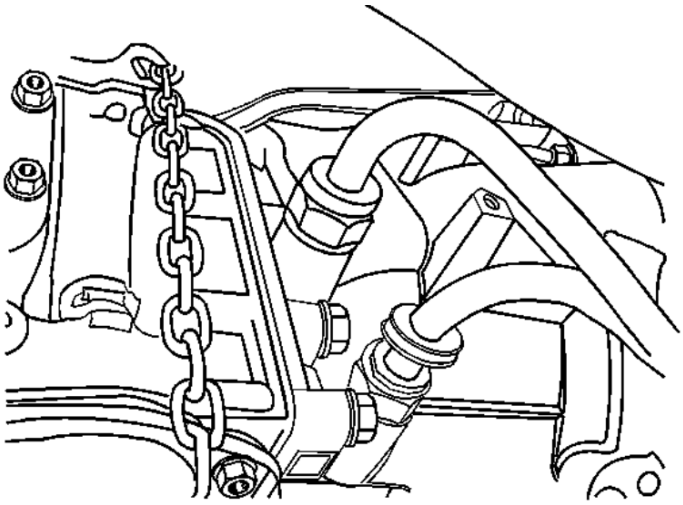

11. Position exhaust hanger and install the bolts and tighten to 12Nm (106 lb-in). 12. Install the transmission heat shield. 13. Position the wiring harness branches.	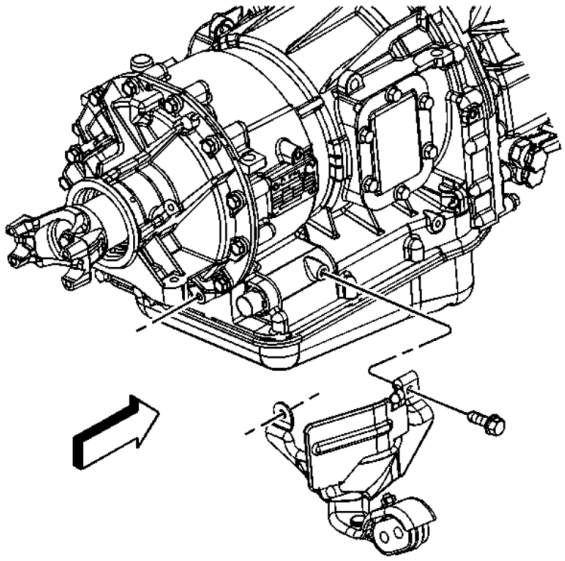
14. Connect the transmission main electrical connector.	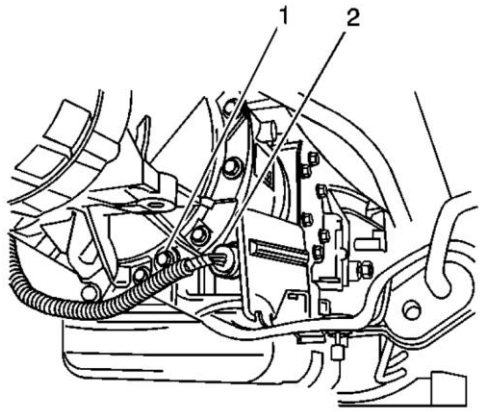
15. Connect the electrical connects on the transmission and transfer case.	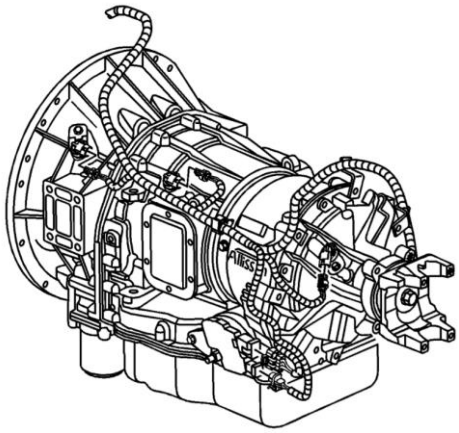

16. Install the fuel line bracket and nut to the transmission converter housing stud. Tighten the nut to 18Nm (13ftlb).	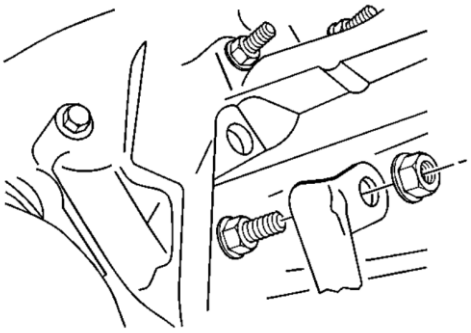
17. Install the fuel line retainer and bolts to the left side of the transmission and tighten to 2.2Nm (22 lb-in). 18. Connect the shift cable and lines to the rear bracket on the transmission.	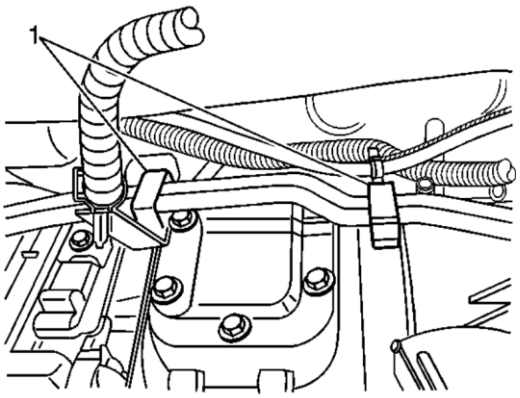
19. Install the shift cable bracket and bolts to the transmission. Tighten to 25Nm (18ftlb).	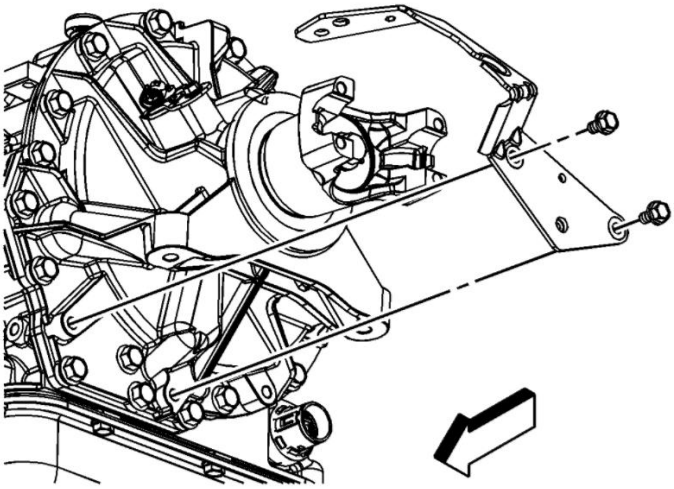

20. Install the range selector cable end to the transmission range selector lever stud.	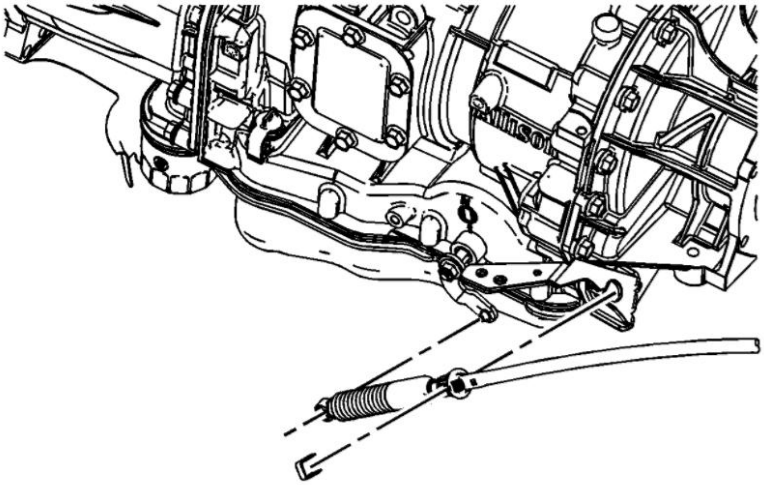
21. Install the range selector cable heat shield. 22. Install the range selector cable shield bolts. Tighten bolts to 25Nm (18ftlb).	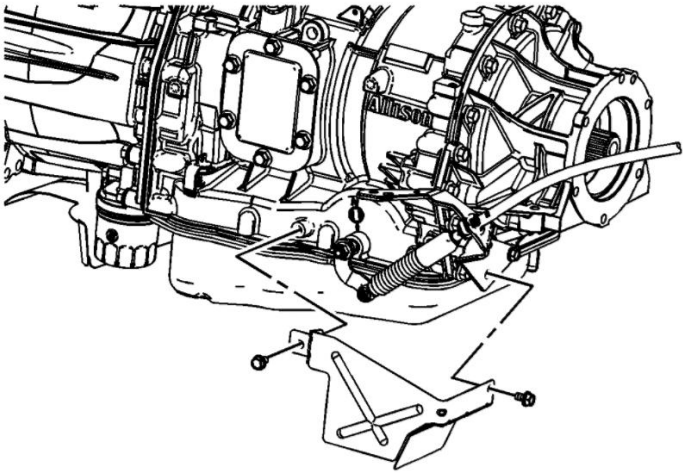
23. Remove the access hole cover on the converter housing in order to rotate the converter and align the first torque converter bolt.	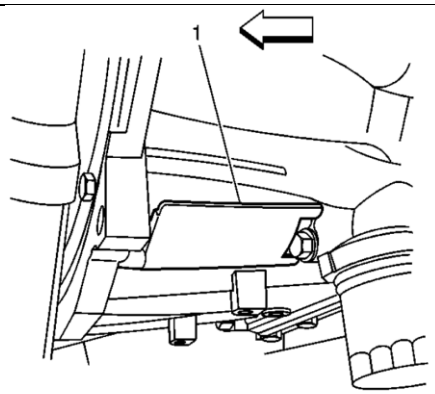

24. If reusing torque converter bolts, clean the bolt threads and apply LOCTITE 242 or equivalent to the threads prior to installation. 25. Install the torque converter bolts and tighten to 60Nm (44ftlb). 26. Install the converter housing access hole cover. 27. Install the starter motor.	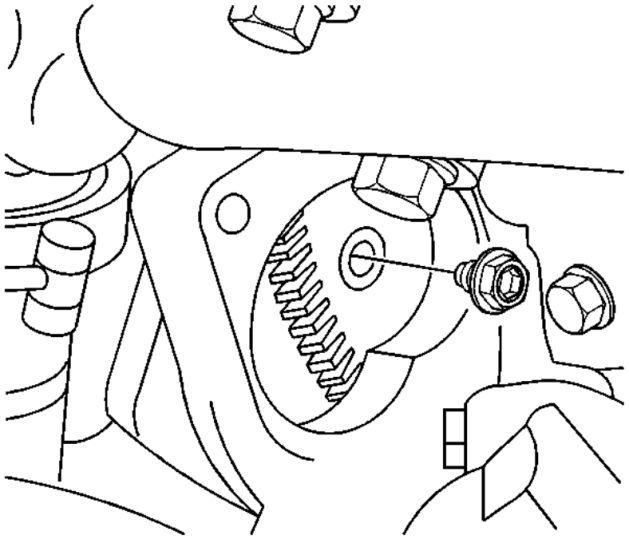
28. Remove the plugs from the transmission oil cooler line fittings in the transmission case, if necessary. 29. Connect the transmission oil cooler lines to the transmission. 30. Lower vehicle. Connect both negative battery cables. 31. Fill the transmission with new transmission fluid. Use TES 668 approved fluids **only**. 32. Install the transmission fluid level indicator. 33. Perform the “Fast Learn” procedure using a scan tool.	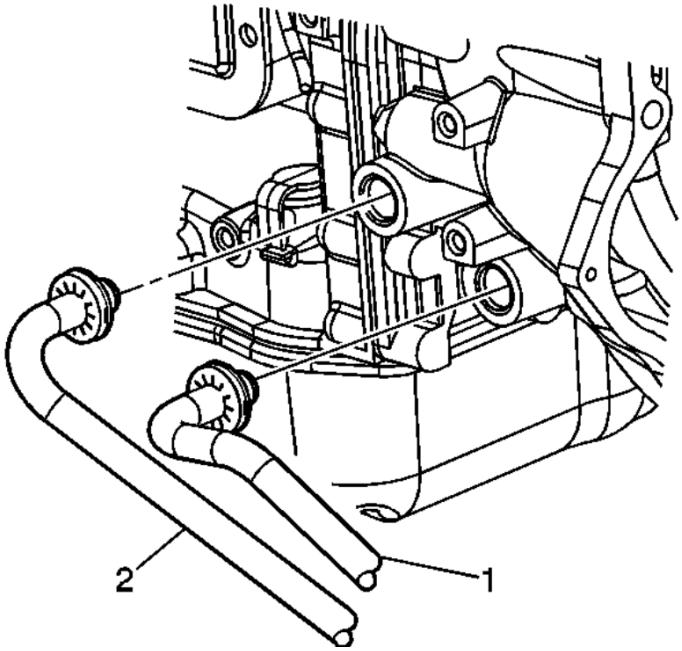

FLUID FILL CAPACITY

THE BD Allison 1000 Transmission holds 3.5 quarts more transmission fluid than the stock Allison 1000 Transmission.

NOTE: Allison **only** recommends TES-668 Approved Fluids.

NOTE: Fill capacities listed only as a guide. **Correct fluid level should always be determined by marks on dipstick. Go slow and check with a dipstick often.**

Application	First Fill Quarts (Liters)	Secondary Fill Quarts (Liters) (Includes TC Preload)	Total Capacity (Liters)
2007.5-2010	**10 (9.5)**	**Approx. 6.2 (5.8)**	**Approx. 16.2 (15.3)**

Application	***Maintenance Fill Quarts (Liters)***
2007.5-2010	Approx. 10.9 (10.3)

Once transmission fluid is filled, start truck but **do not** drive it yet. Allow the transmission to pump fluid into the converter, coolers etc. Re-check fluid level.

SPECIAL NOTES

- BD recommends using only a back flow capable transmission flushing machine using only oil-based cleaners. DO NOT use “Transmission flush in a Can”.
- Do not use water-based transmission flushing fluid. The lining in the converter clutches will disintegrate, rendering the converter useless and warranty will be voided.
- Transmission/Converter failures require that the remote filter be returned for inspection before any claim is considered, as well you will be required to submit the cooler flow rate in GPM measured at the outlet of the Oil/Air transmission cooler.